City of Kingsburg
2009

Improvement Standards

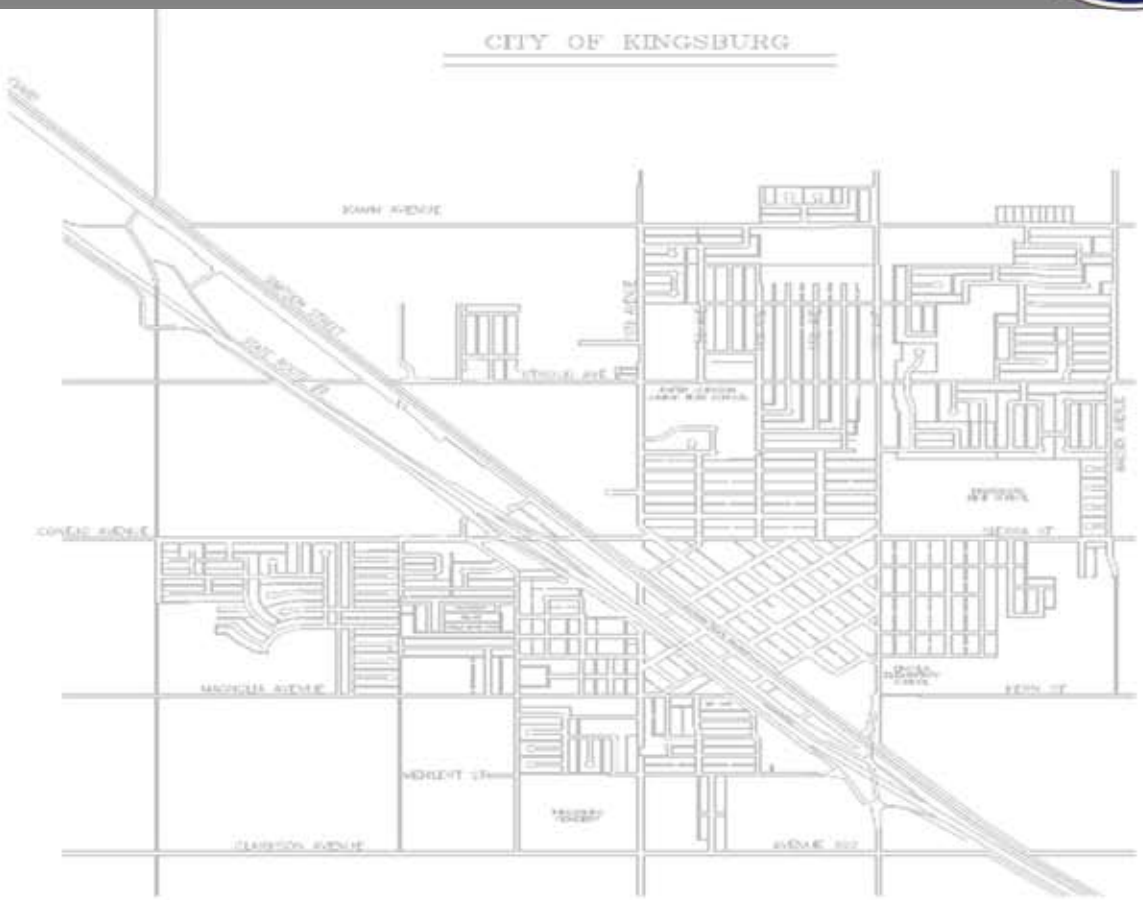

DRAINAGE

D-1 Curb Inlet
D-2 Aluminum Marker
D-3 Inlet Throat Frame
D-4 Type 'A' Manhole
D-5 Cast Iron Manhole Frame and Cover
D-6 Drainage Basin
D-7 Sidewalk Drain
D-8 Thru Drain Detail for Medians
D-9 Silt Fence
D-10 Inlet Protection - Type I
D-11 Stabilized Construction Entrance
D-12 Inlet Protection - Type II

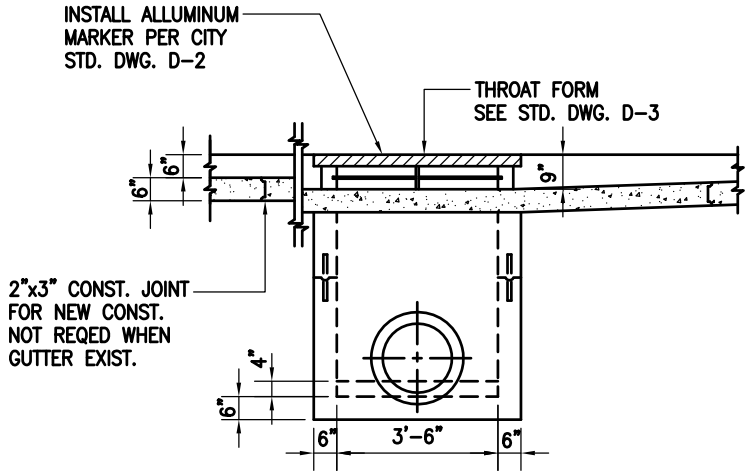

SECTION "BB"
SCALE 1"= 3'-0"

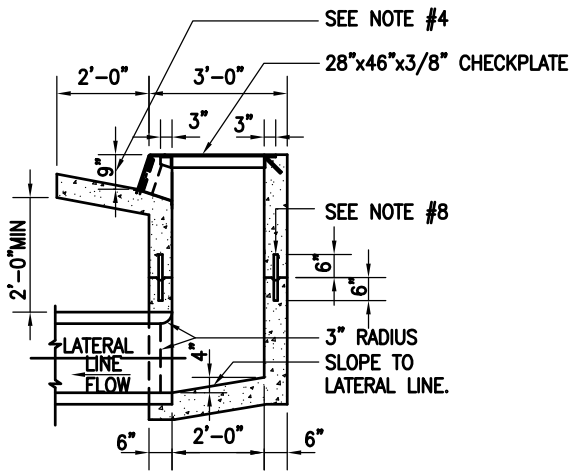

SECTION "AA"
SCALE 1"= 3'-0"

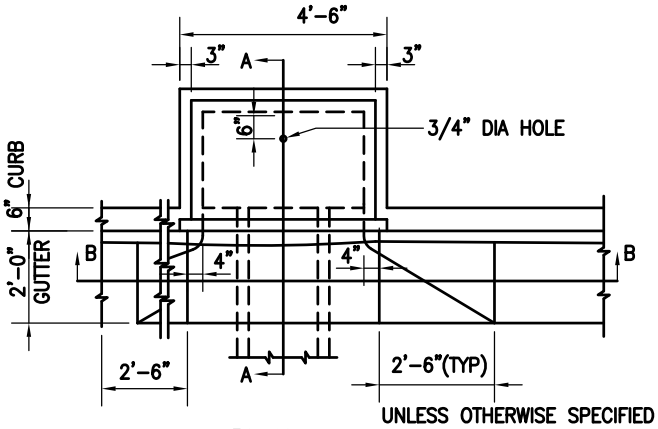

PLAN
SCALE 1"= 3'-0"

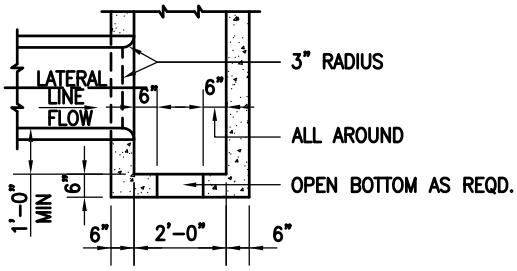

OUTLET DETAIL
SCALE 1"= 3'-0"

NOTES:

1. THE INLET MAY BE MODIFIED SLIGHTLY TO MATCH EXISTING IMPROVEMENTS, AS DIRECTED BY THE CITY ENGINEER.
2. STRUCTURE SHALL BE CLASS "A" CONCRETE. EXPOSED SURFACES SHALL BE FINISHED AS PER CURB SPECIFICATIONS.
3. COST OF FRAME AND GRATE AND THROAT FRAME SHALL BE INCLUDED IN PRICE OF INLET OR OUTLET.
4. WHEN EMPLOYED AS OUTLET, PLACE GUTTER 6" BELOW TOP OF CURB GRADE AND ELIMINATE ½" IRON ROD FROM THROAT FORM.
5. CURB AND GUTTER SHALL BE CONSTRUCTED OR RECONSTRUCTED ON EACH SIDE OF BOX AS INDICATED ON THE PLANS AND COST THEREOF SHALL BE INCLUDED IN PRICE OF INLET OR OUTLET.
6. FLOOR OF THE INLET SHALL SLOPE FROM ALL WAYS TO THE LATERAL LINE AND SHALL BE GIVEN A STEEL – TROWELED FINISH.
7. AT THE CONTACT POINT BETWEEN THE LATERAL LINE AND THE INLET WALL A SMOOTH 3" RADIUS CURVE SHALL BE CONSTRUCTED.
8. IF INLET IS CONSTRUCTED IN A TWO STAGE POUR, PROVIDED A ROUGHENED CONSTRUCTION JOINT AND PLACED ONE NO.4 BAR 12" LONG IN EACH OF THE FOUR WALLS, AS SHOWN.

REVISIONS		CITY OF KINGSBURG	STD No.
FEB 09			
		CURB INLET	D–1

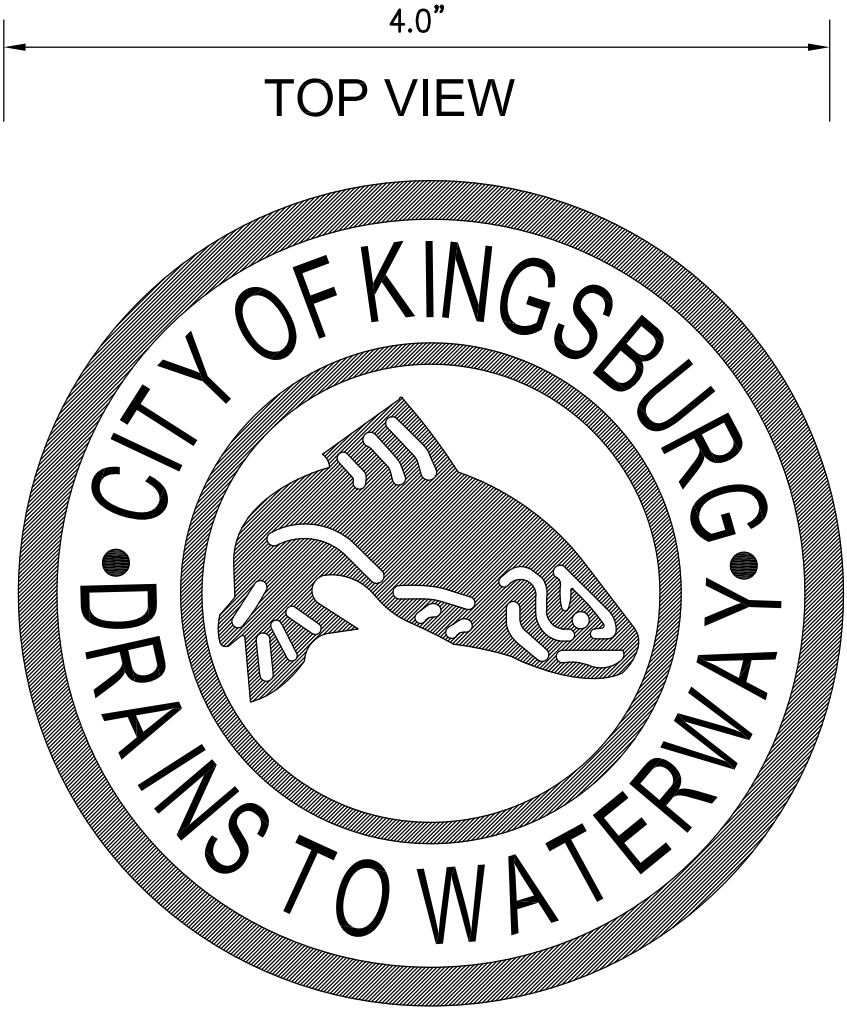

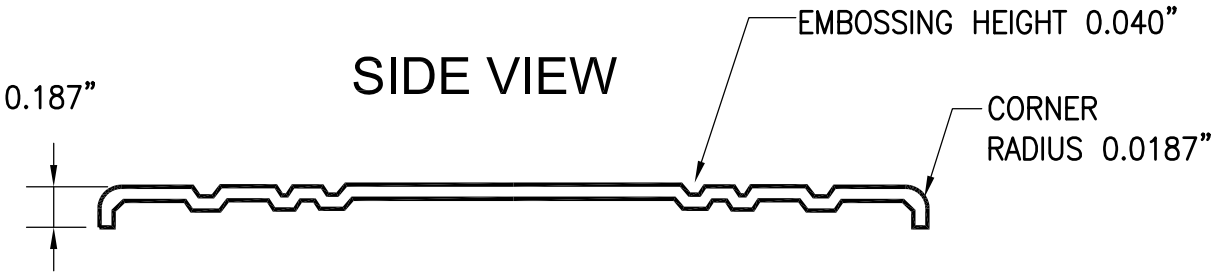

NOTE:

1. MARKER SHALL BE ALMETEK MODEL NO. STDM-9665-SSP OR EQUAL.

REVISIONS		CITY OF KINGSBURG	STD No.
FEB 09			
		ALUMINUM MARKER	D-2

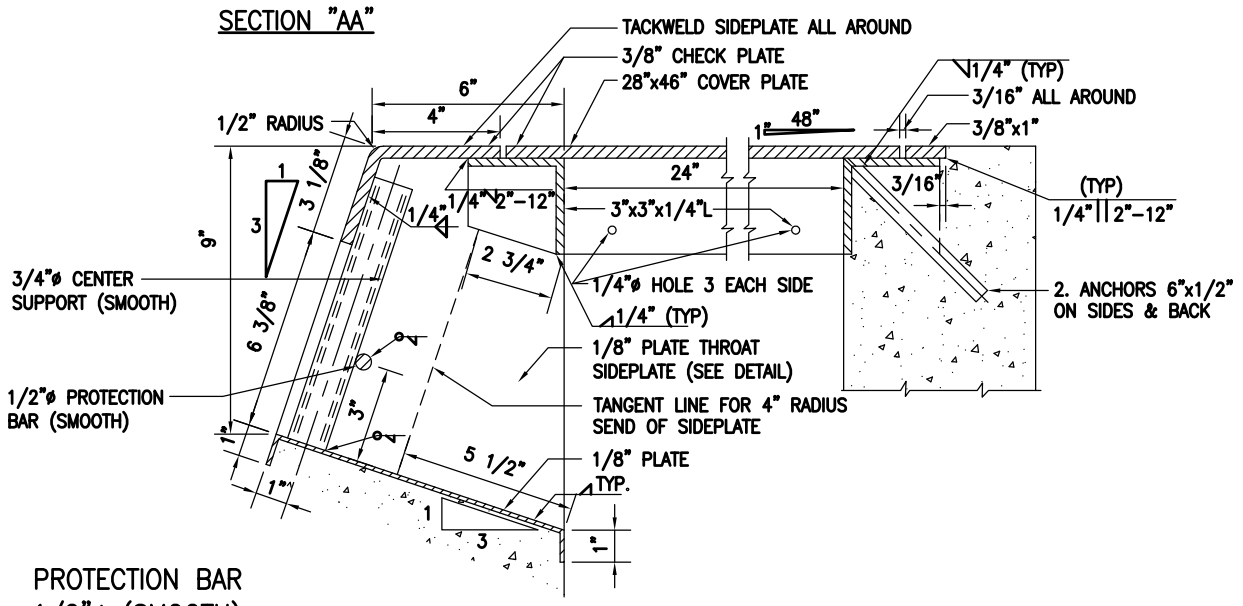

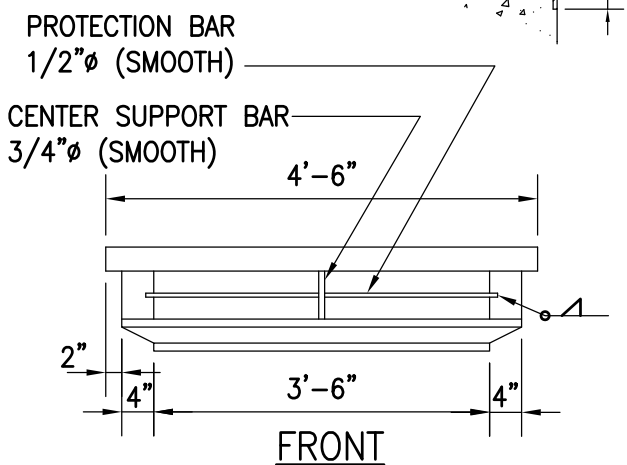

FRONT

SCALE 1" = 2'-0"

NOTES

1. ALL DIMENSIONS ARE FINISHED DIMENSIONS.
2. ALL PARTS SHALL BE STRUCTURAL GRADE STEEL.
3. ALL EXPOSED METAL PARTS SHALL BE PAINTED OR DIPPED WITH AN ASPHALTUM PAINT.

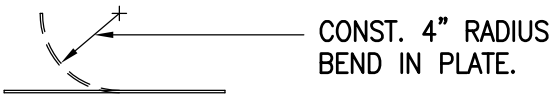

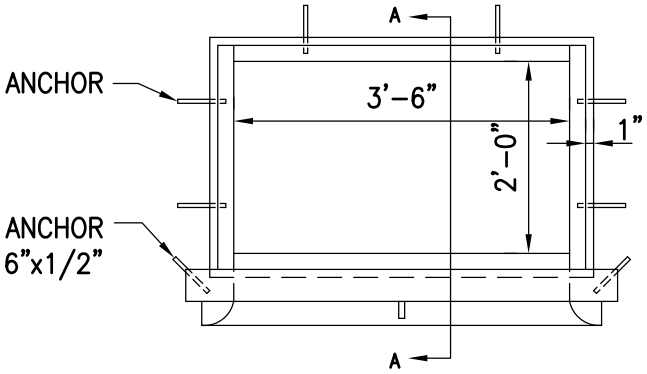

PLAN

SCALE 1" = 2'-0"

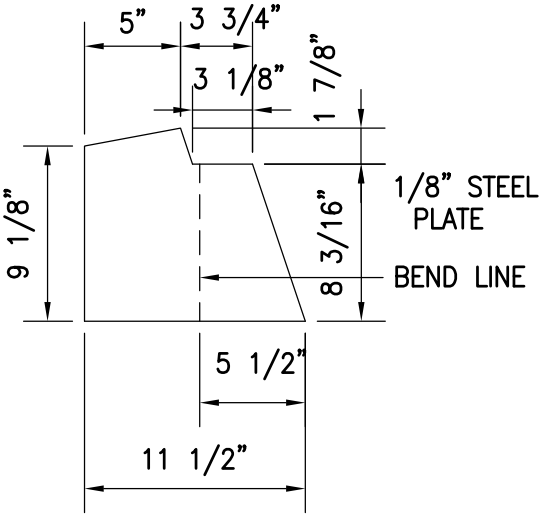

THROAT FORM & FRAME

THROAT SIDEPLATE

REVISIONS		CITY OF KINGSBURG	STD No.
FEB 09		INLET THROAT FRAME	D-3

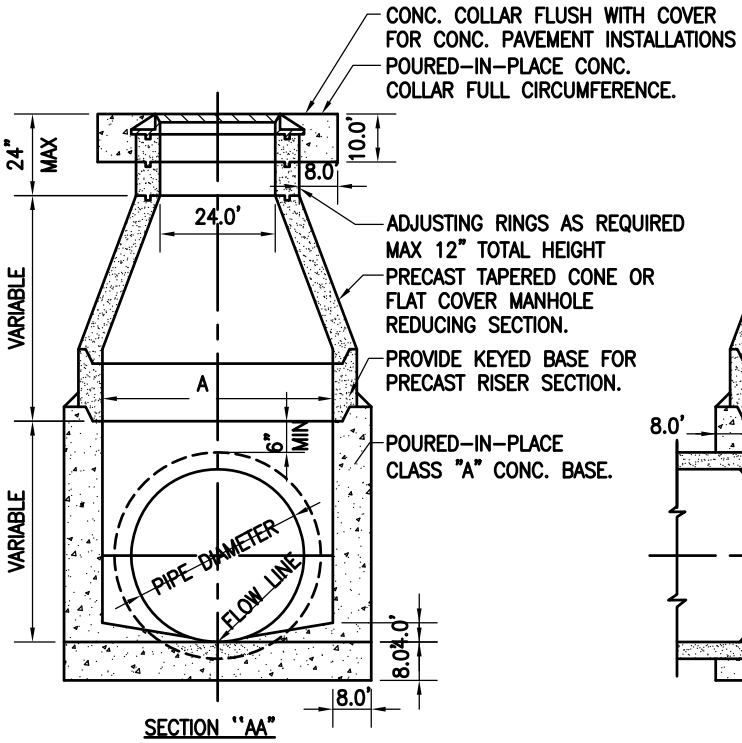

SECTION "AA"

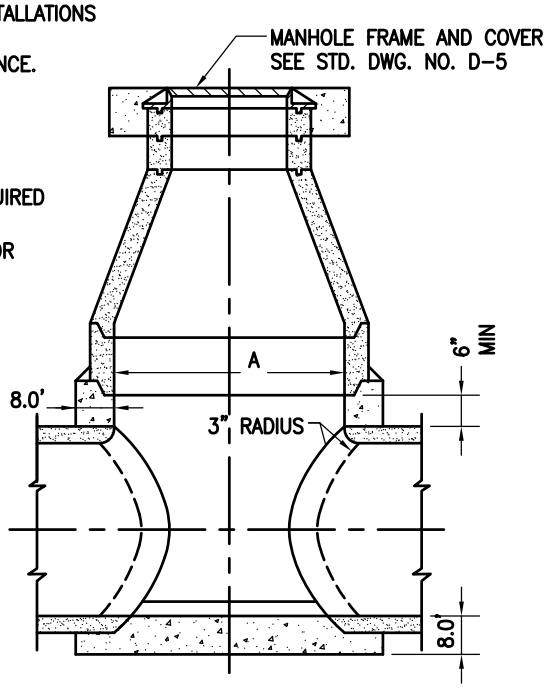

SECTION "BB"

MANHOLE DIMENSIONS

PIPE DIAMETER	A
12"-36"	48"
42"-48"	60"
54"-60"	70"

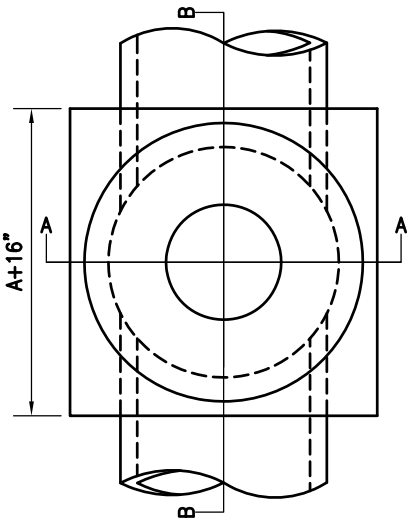

PLAN

1. PRECAST PIPE ADJUSTING RINGS AND TAPERED SECTIONS SHALL BE CONSTRUCTED IN ACCORDANCE WITH A.S.T.M. C-478, USING TYPE II CEMENT.
2. ALL JOINTS BETWEEN PRECAST SECTIONS SHALL BE MORTARED.
3. INTERIOR OF THE MANHOLE SHALL HAVE A SMOOTH TROWELED SURFACE.

REVISIONS	
FEB 09	

CITY OF KINGSBURG

TYPE 'A' MANHOLE

STD No. D-4

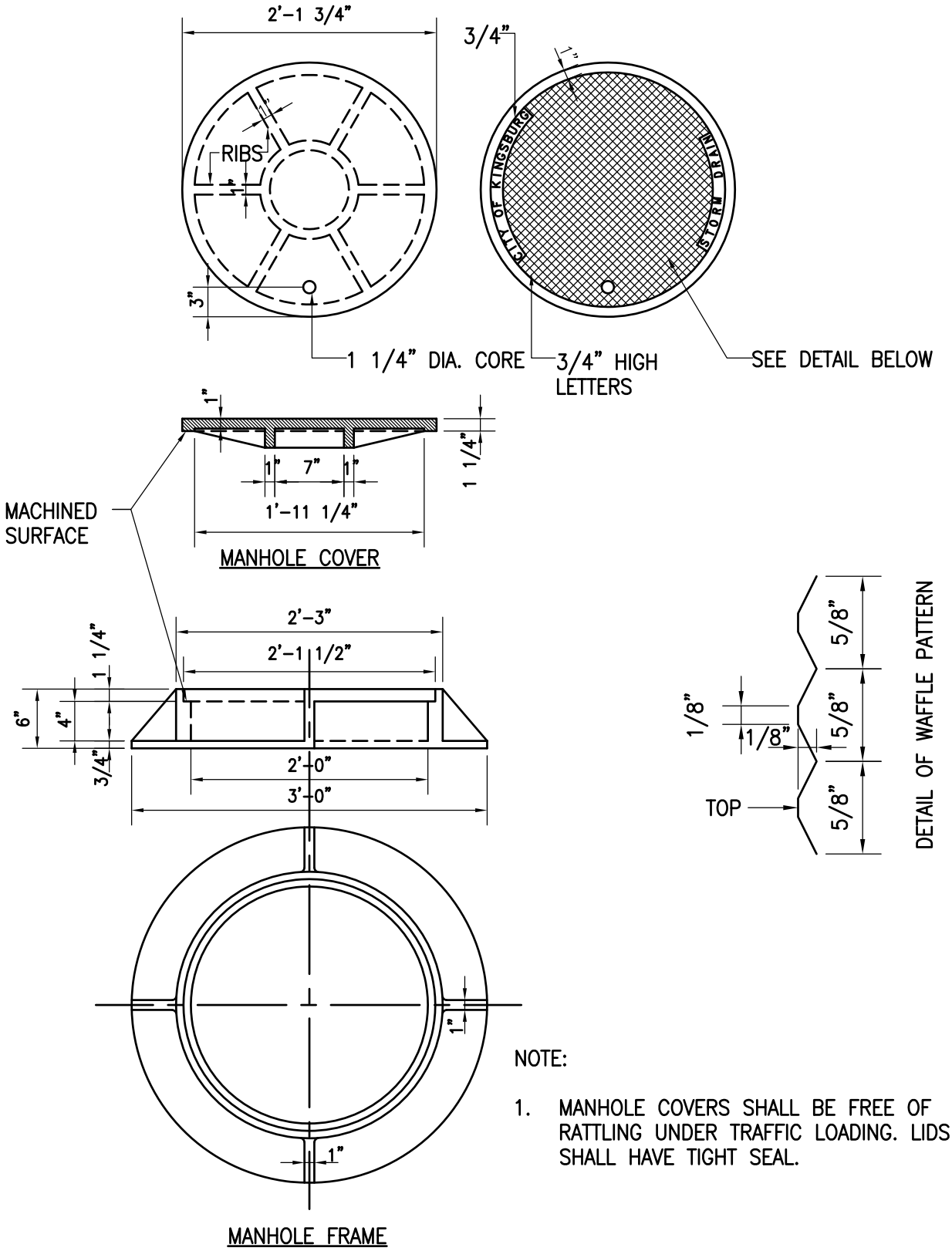

NOTE:

1. MANHOLE COVERS SHALL BE FREE OF RATTLING UNDER TRAFFIC LOADING. LIDS SHALL HAVE TIGHT SEAL.

REVISIONS		CITY OF KINGSBURG	STD No.
FEB 09		CAST IRON MANHOLE FRAME & COVER	D-5

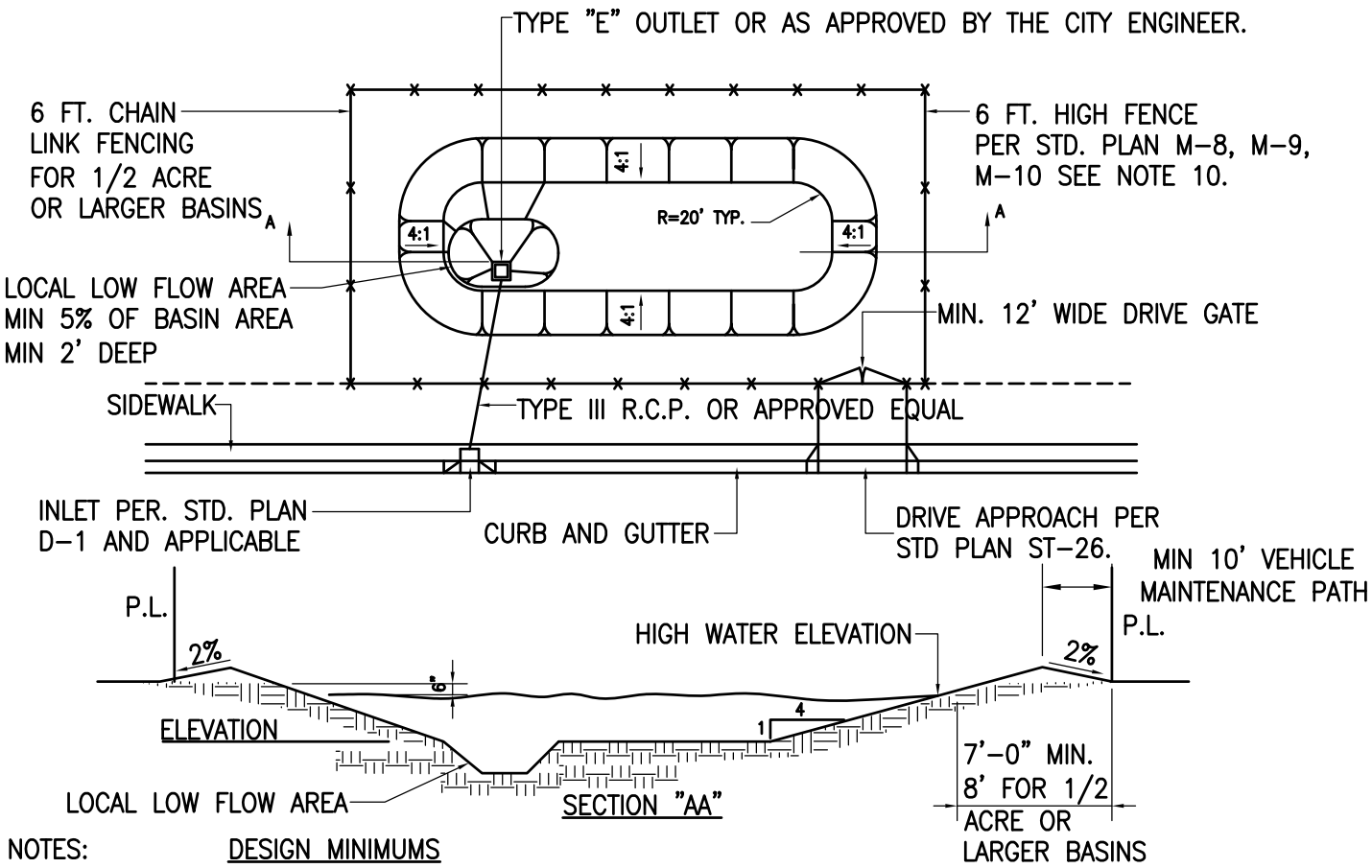

NOTES: DESIGN MINIMUMS

1. OVERFLOW MUST BE TO THE STREET, UNLESS OTHERWISE APPROVED BY THE CITY ENGINEER.
2. DESIGN WATER SURFACE ELEVATION SHALL BE SIX (6") INCHES BELOW THE LOWEST INLET FLOW LINE OR POND PERIPHERAL ELEVATION, WHICHEVER IS LOWER.
3. REQUIRED CAPACITY: V = C I A WHERE,

   V = REQUIRED BASIN CAPACITY IN CUBIC FEET
   C = RUNOFF COEFFICIENT
   I = RAINFALL FROM A DESIGN STORM (100 YR -10 DAY STORM MIN.)
   A = TRIBUTARY AREA IN SQUARE FEET.

4. PROVIDE COMPOSITE "C" CALCULATIONS.
5. EIGHT (8') FOOT WIDE VEHICLE RAMP WITH A MAX. SLOPE OF 15% REQUIRED IN 1/2 ACRE OR LARGER BASINS.
6. TEMPORARY PONDING BASINS SHALL BE FENCED WITHIN SEVEN (7) DAYS TIME AFTER THEY BECOME OPERATIONAL.
7. BASIN SHALL BE SIZED TO HANDLE THE REQUIRED STORAGE VOLUME WITHOUT EXCEEDING AN EXCAVATION DEPTH OF TWELVE (12') FEET.
8. ADEQUATE AREA AT THE FLOOR OF THE BASIN SHALL BE PROVIDED FOR MANEUVERING MAINTENANCE EQUIPMENT.
9. LANDSCAPING OF THE BASIN NEED NOT BE NECESSARY IF SCREENED FENCING IS PROVIDED AND APPROVED BY THE CITY ENGINEER. HOWEVER, LANDSCAPING TREATMENT BETWEEN THE FENCE AND THE STREET MAY BE REQUIRED.
10. A SOIL BORING LOG TO A DEPTH OF NOT LESS THAN 30 FEET SHALL BE SUBMITTED TO THE CITY ENGINEER.

REVISIONS		CITY OF KINGSBURG	STD No.
FEB 09			
		DRAINAGE BASIN	D-6

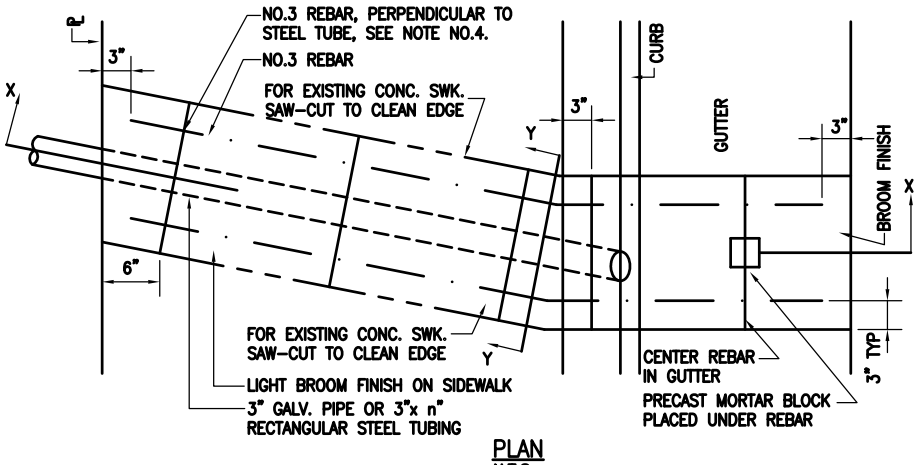

PLAN
N.T.S.

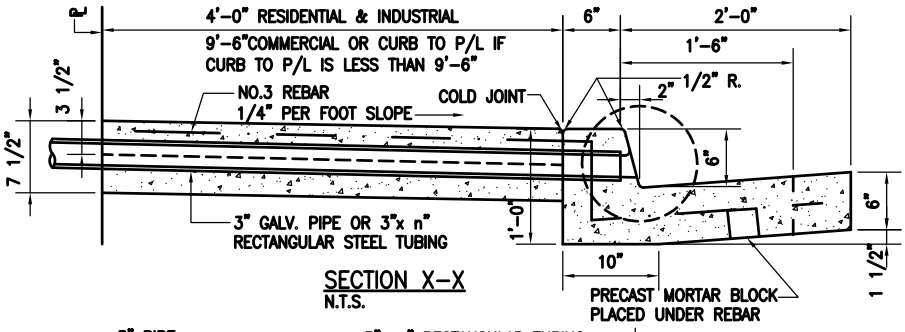

SECTION X-X
N.T.S.

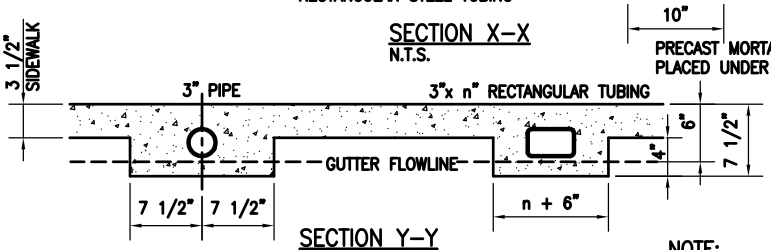

SECTION Y-Y
N.T.S.

NOTE:

1. 18" GUTTER TO BE INSTALLED WHERE SIMILAR EXISTS.
2. P/L REFERS TO PROPERTY LINE.
3. REMOVE AND REPLACE CONCRETE CURB AND GUTTER WITHIN LIMITS OF WORK WHERE CONCRETE CURB & GUTTER EXIST.
4. REBAR SPACING PERPENDICULAR TO PIPE OR TUBING – 18"o.c. NO.3 REBAR SHALL BE REQUIRED WITHIN EXISTING SIDEWALK INSTALLATION ONLY.
5. 3" PIPE SHALL BE GALVANIZED PIPE RECTANGULAR TUBING SHALL BE STEEL.
6. MINIMUM WALL THICKNESS OF RECTANGULAR TUBING IS 3/16".
7. NO DRAIN SHALL BE PERMITTED IN DRIVE APPROACH AREAS.
8. DRAINS SHALL BE ANGLED THROUGH SIDEWALK IN DIRECTION OF GUTTER FLOW.
9. PERMITTED SIZE OF TUBING TO BE BASED ON DRAINAGE AREA & SHALL BE DETERMINED BY THE ENGINEER.

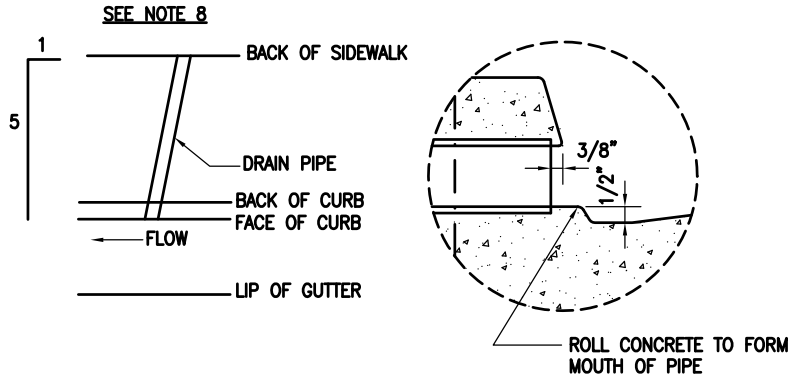

DETAIL
N.T.S.

SIDEWALK DRAIN PIPE

REVISIONS		CITY OF KINGSBURG	STD No.
FEB 09			
		SIDEWALK DRAIN	D-7

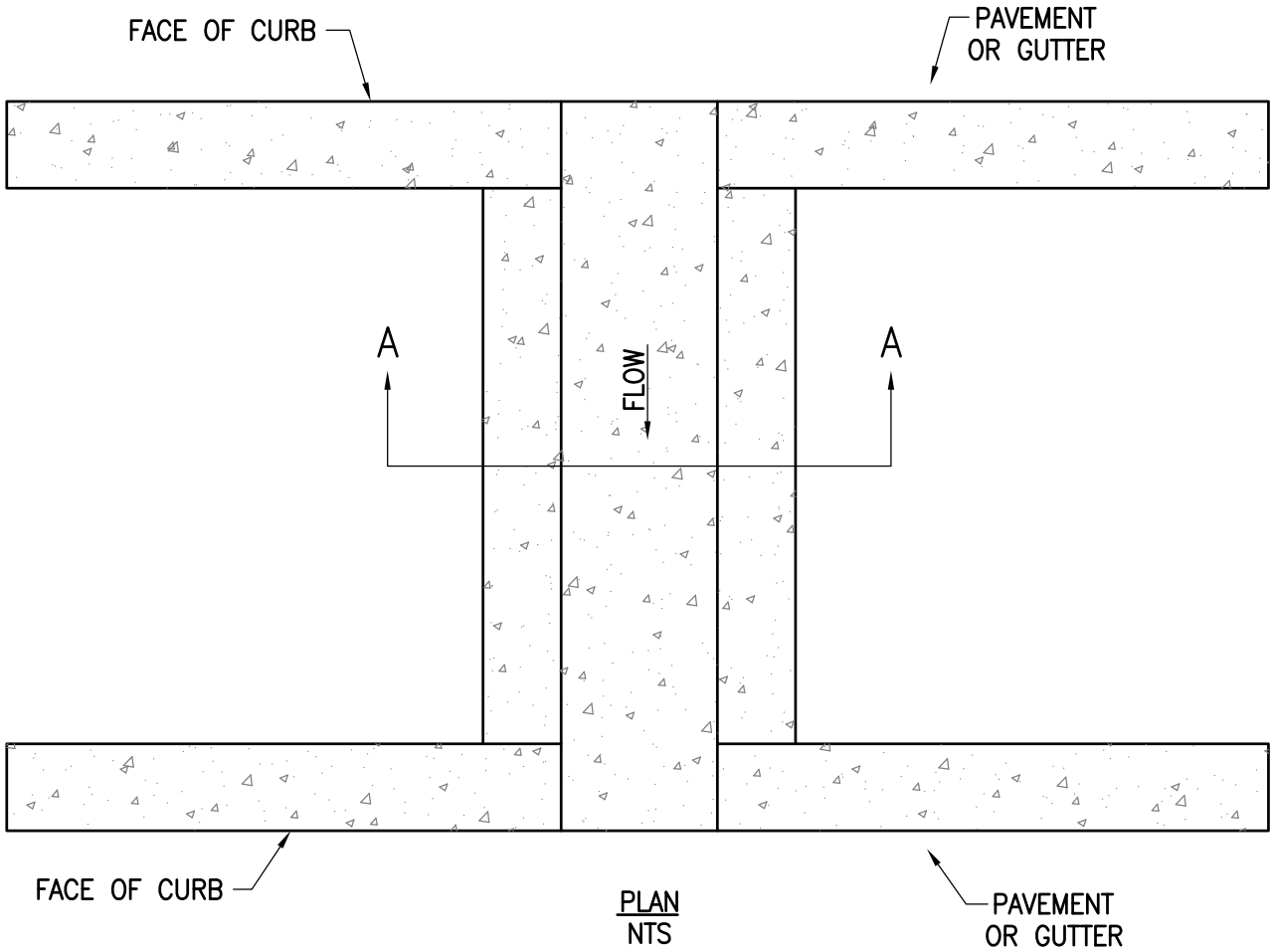

PLAN
NTS

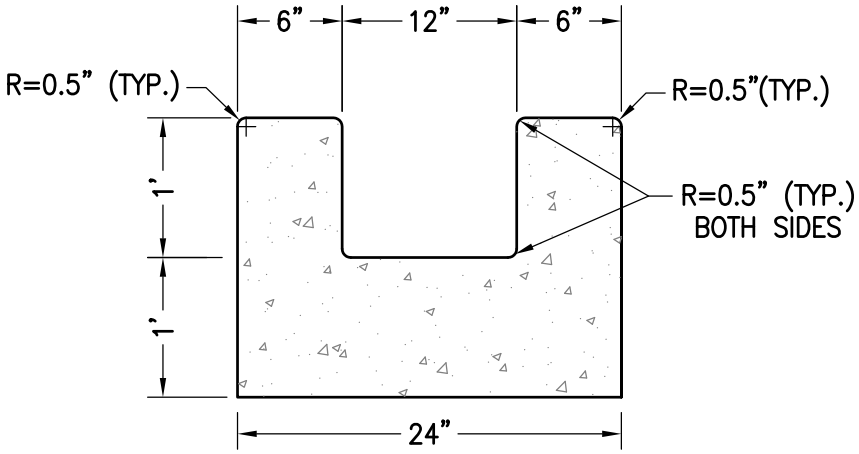

SECTION A–A
NTS

REVISIONS		CITY OF KINGSBURG	STD No.
FEB 09		THRU DRAIN DETAIL FOR MEDIANS	D–8

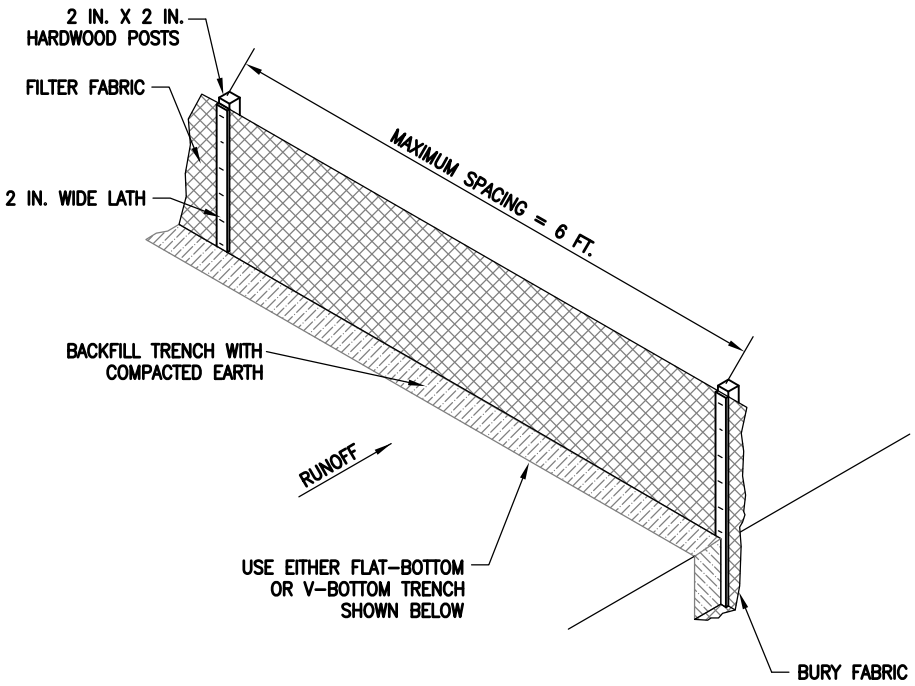

SILT FENCE INSTALLATION

MATERIAL SPECIFICATION

SPECIFICATION	LIGHT DUTY SILT FENCE (SF-LD)
MIN. TENSEL STRENGTH (LBS) ASTM D-4632	WARP – 120 FILL – 100
MAX. ELONGATION (%) ASTM D-4632	40
APPARENT OPENING SIZE MAX. SIEVE SIZE (ASTM D-4751)	#30
MAX. FLOW RATE (GAL/MIN/SF) GDT – 87	25
ULTRAVIOLENT STABILITY ASTM D-4632 AFTER 300 HOURS PER ASTM D-4355	80
MIN. BURSTING STRESS (PSI) ASTM D-3786	WARP – 120 FILL – 100
MIN. FABRIC WIDTH (IN)	36 IN.

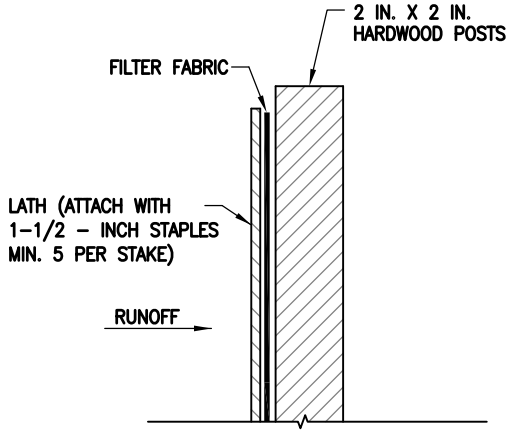

FABRIC ATTACHMENT DETAIL

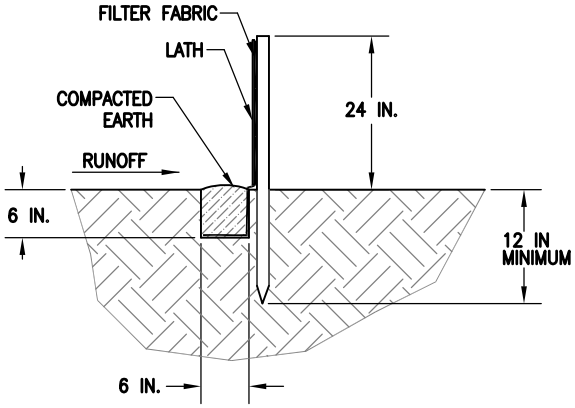

FLAT BOTTOM TRENCH SECTION

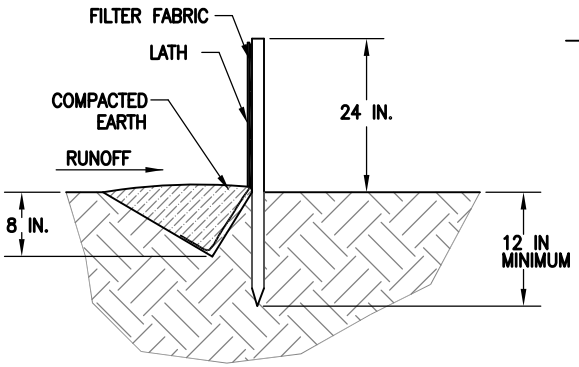

V-SHAPED TRENCH SECTION

REVISIONS

FEB 09

CITY OF KINGSBURG

SILT FENCE

STD No. D-9

CONSTRUCT DOWNSTREAM DIKE WHEN REQUIRED TO PREVENT BY-PASS FLOW.

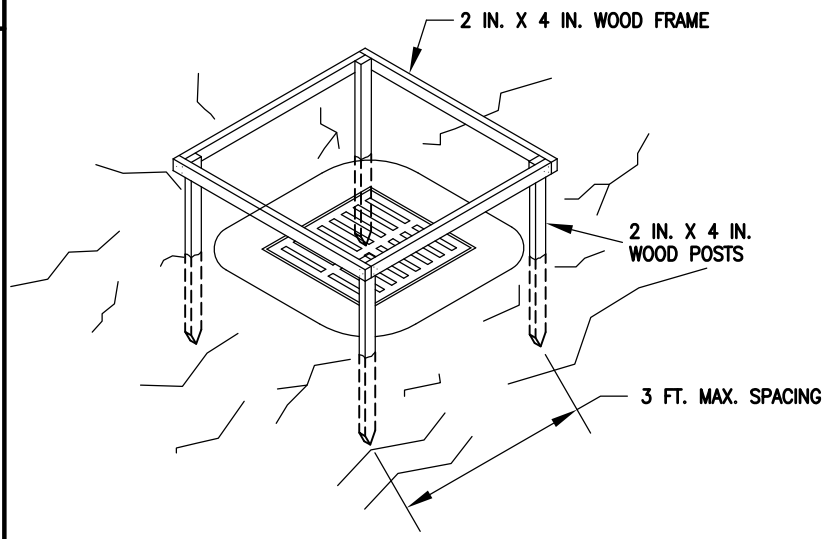

WOOD FRAME INSTALLATION DETAIL

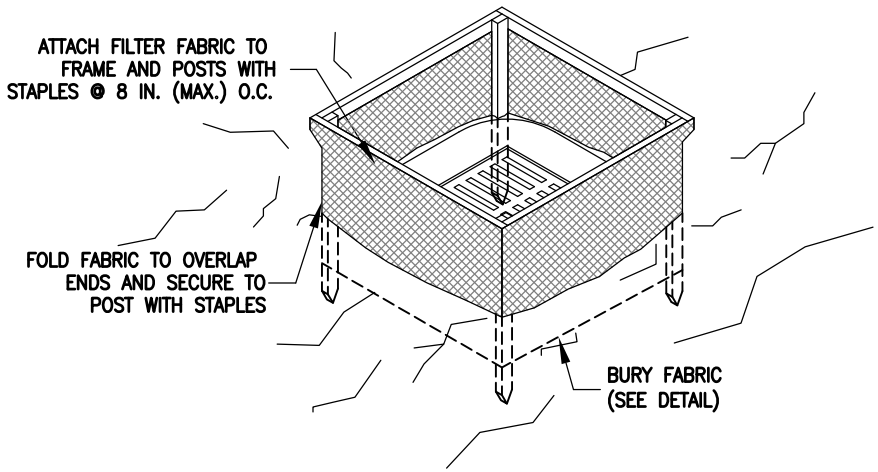

FILTER FABRIC INSTALLATION DETAIL

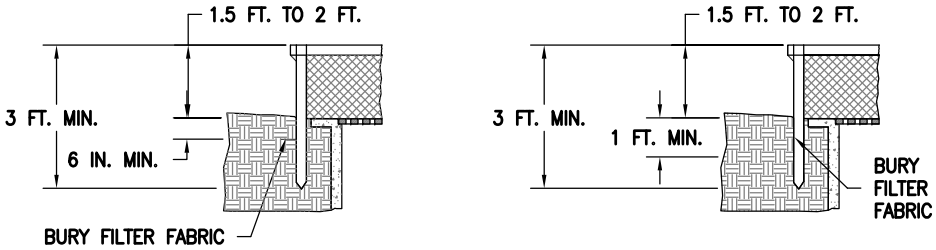

FILTER FABRIC BURIAL OPTIONS

THIS STRUCTURE IS FOR USE IN UNPAVED AREAS ONLY.
MAXIMUM CONTRIBUTING DRAINAGE AREA = 1 ACRE

REVISIONS

FEB 09

CITY OF KINGSBURG

INLET PROTECTION – TYPE I

STD No. D-10

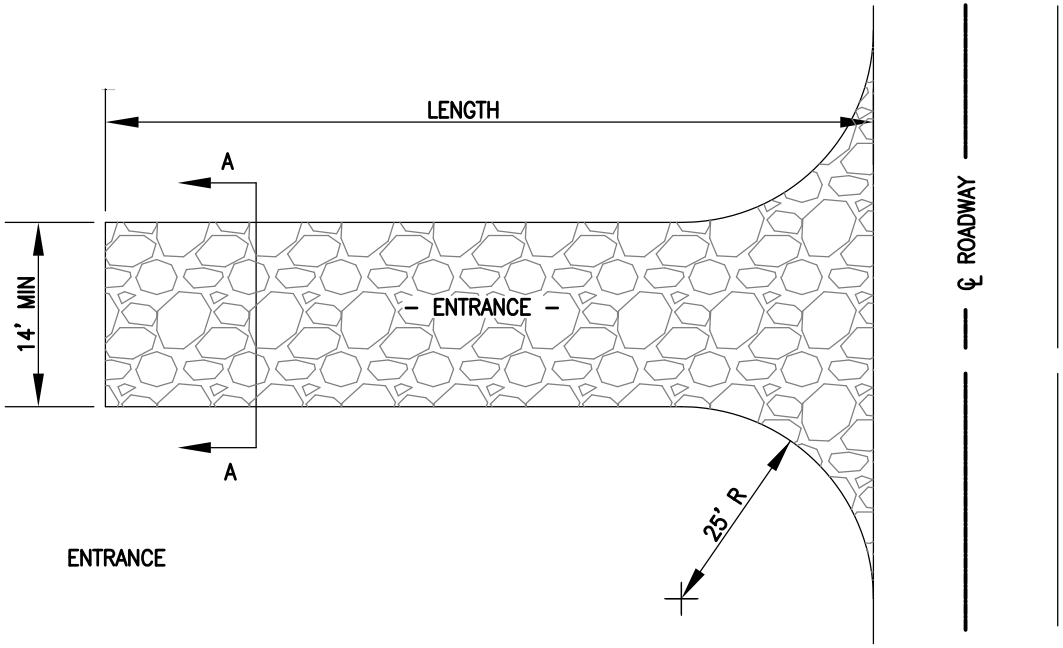

PLAN VIEW

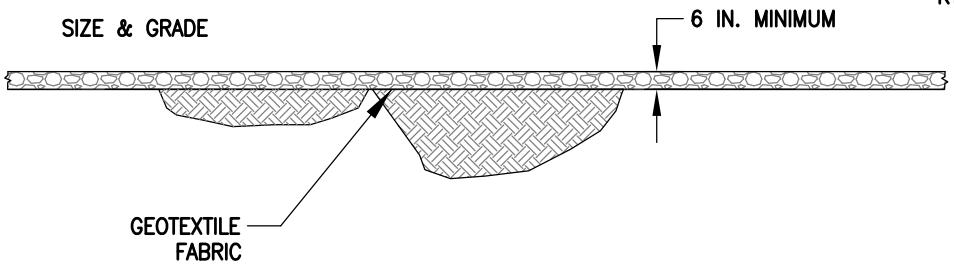

CULVERT DETAIL

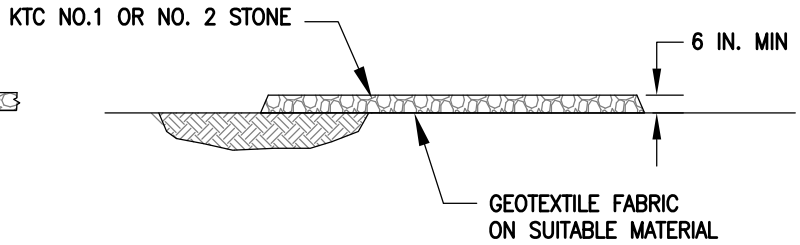

SECTION "A–A"

NOTES:

1. THE ENTRANCE SHALL BE MAINTAINED IN A CONDITION THAT WILL PREVENT TRACKING OF FLOWING OF SEDIMENT ONTO PUBLIC RIGHT OF WAYS. THIS MAY REQUIRE TOP DRESSING, REPAIR AND/OR CLEAN OUT OF ANY MEASURES USED TO TRAP SEDIMENT.
2. WHEN NECESSARY, WHEELS SHALL BE CLEANED PRIOR TO ENTRANCE ONTO PUBLIC RIGHT OF WAY.
3. WHEN WASHING IS REQUIRED, IT SHALL BE DONE ON AN AREA STABILIZED WITH CRUSHED STONE THAT DRAINS INTO AN APPROVED SEDIMENT TRAP OR SEDIMENT BASIN.
4. CLEANING OF ROADWAY IS REQUIRED IF MUD AND SEDIMENT ENTERS ROADWAY.

REVISIONS

FEB 09

CITY OF KINGSBURG

STABILIZED CONSTRUCTION ENTRANCE

STD No. D–11

MAY BE USED SHORT TERM WITH UTILITY WORK
AND WITH PHASING OF DEVELOPMENT

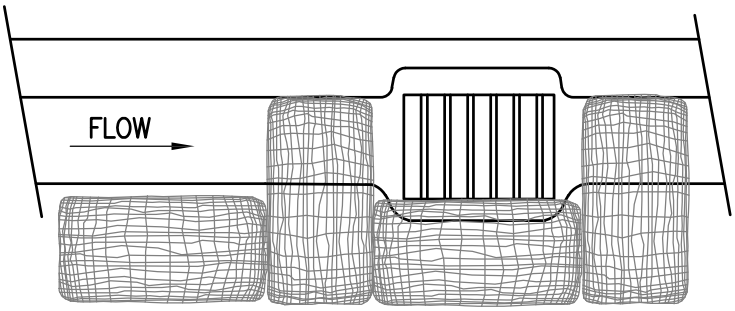

CATCH BASIN

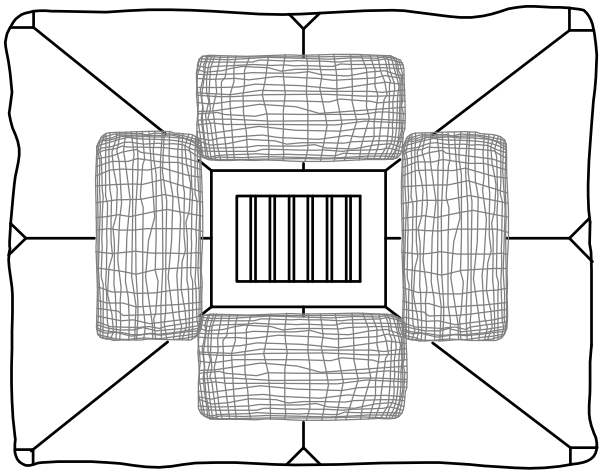

AREA DRAIN

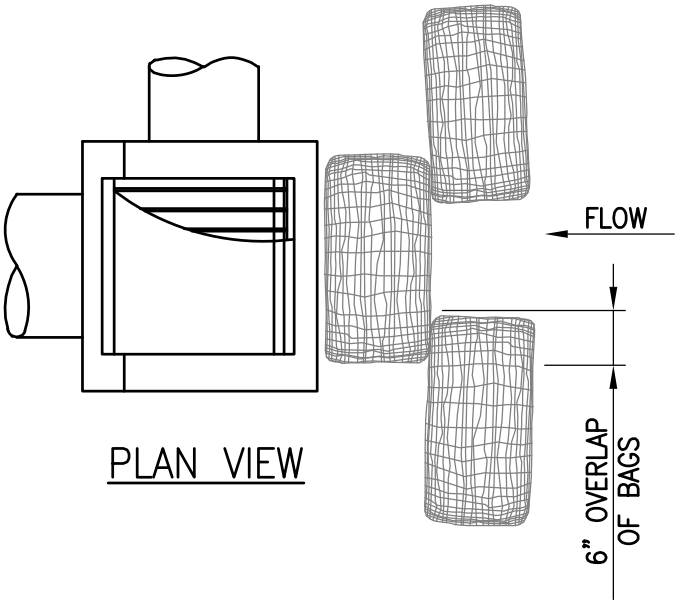

PLAN VIEW

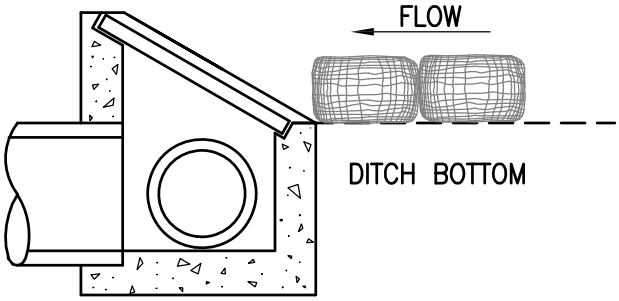

PROFILE

DITCH INLET

NOTES

1. ADDITIONAL MEASURES MUST BE CONSIDERED, DEPENDING ON SOIL TYPES.
2. BIOFILTER BAGS SHOULD BE STAKED, WHERE APPLICABLE, USING TWO (2) 1"X2" WOODEN STAKES, OR APPROVED EQUAL, PER BAG.
3. ROCK SOCKS OR GRAVEL.

REVISIONS		CITY OF KINGSBURG	STD No.
FEB 09		INLET PROTECTION – TYPE II	D–12

ELECTRICAL

E-1 Street Light - Major Street with Base, Pull Box, and PVC Conduit
E-2 Street Light - Local Street with Base, No Pull Box, and PVC Conduit
E-3 Street Light - Concrete Pull boxes
E-4 Street Light - Connection Diagram
E-5 Street Light - Layout
E-6 Street Light - Placement Divided Arterials Streets
E-7 Street Light - Placement Collector Street
E-8 Street Light - Placement Local Streets
E-9 Street Light - Placement Cul-de-sac Street
E-10 Street Light - Placement Arterial Intersection
E-11 Street Light - Foundation Wire Way Detail
E-12 Street Light - Pole Numbering
E-13 Street Light - Wiring
E-14 Street Light and Signal - Combination Wiring
E-15 Decorative Lighting

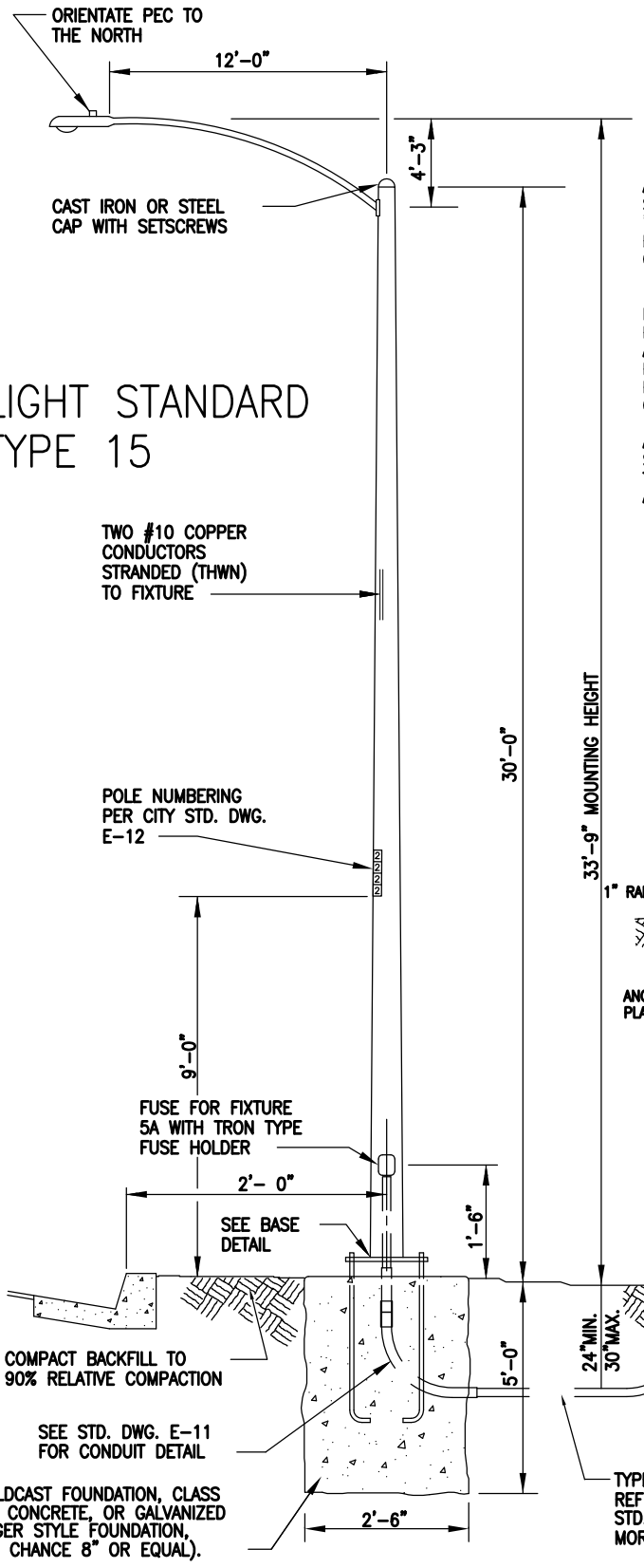

GENERAL NOTES

ALL WORK SHALL CONFORM TO THE APPLICABLE SECTIONS OF THE SPECIFICATIONS ENTITLED "STANDARD SPECIFICATIONS, STATE OF CALIFORNIA, BUSINESS AND TRANSPORTATION AGENCY, DEPARTMENT OF TRANSPORTATION" AND THE NATIONAL ELECTRICAL CODE.

LUMINAIRE SHALL BE COBRA HEAD TYPE, 120V HIGH PRESSURE SODIUM-VAPOR WITH TYPE IV QUICK ACTING PHOTOELECTRIC CELL AND HAVE A HIGH POWER FACTOR REACTOR BALLAST. LENS SHALL BE POLYCARBONATE PLASTIC. BULB SHALL BE 150 WATT OR 70 WATT.

ALL STREET LIGHTS SHALL BE NUMBERED. NUMERICAL SEQUENCE TO BE OBTAINED FROM P.G.&E. NUMBERS TO BE 1 1/2" HIGH AND INSTALLED NINE FEET ABOVE FINISHED GRADE.

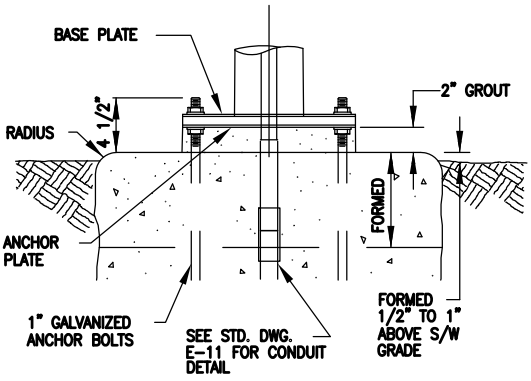

BASE DETAIL

REVISIONS	
FEB 2009	

CITY OF KINGSBURG

STREETLIGHT-MAJOR STREET WITH BASE, PULL BOX & PVC CONDUIT

STD No. E-1

S:\2008\08-056\Kingsburg Standards Update\E-Electrical\E-01.dwg 6-01-09 08:34 AM

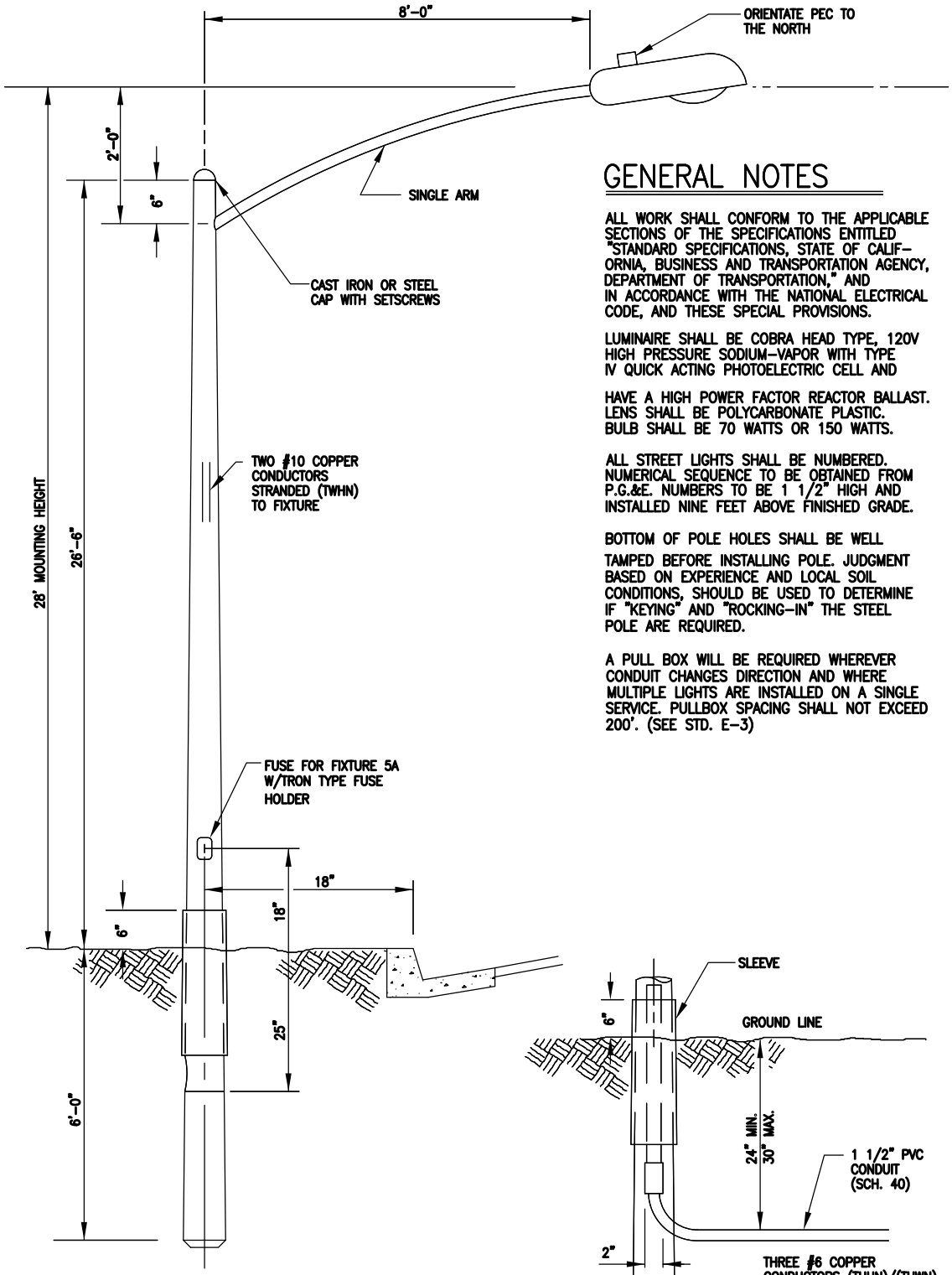

GENERAL NOTES

ALL WORK SHALL CONFORM TO THE APPLICABLE SECTIONS OF THE SPECIFICATIONS ENTITLED "STANDARD SPECIFICATIONS, STATE OF CALIFORNIA, BUSINESS AND TRANSPORTATION AGENCY, DEPARTMENT OF TRANSPORTATION," AND IN ACCORDANCE WITH THE NATIONAL ELECTRICAL CODE, AND THESE SPECIAL PROVISIONS.

LUMINAIRE SHALL BE COBRA HEAD TYPE, 120V HIGH PRESSURE SODIUM-VAPOR WITH TYPE IV QUICK ACTING PHOTOELECTRIC CELL AND

HAVE A HIGH POWER FACTOR REACTOR BALLAST. LENS SHALL BE POLYCARBONATE PLASTIC. BULB SHALL BE 70 WATTS OR 150 WATTS.

ALL STREET LIGHTS SHALL BE NUMBERED. NUMERICAL SEQUENCE TO BE OBTAINED FROM P.G.&E. NUMBERS TO BE 1 1/2" HIGH AND INSTALLED NINE FEET ABOVE FINISHED GRADE.

BOTTOM OF POLE HOLES SHALL BE WELL TAMPED BEFORE INSTALLING POLE. JUDGMENT BASED ON EXPERIENCE AND LOCAL SOIL CONDITIONS, SHOULD BE USED TO DETERMINE IF "KEYING" AND "ROCKING-IN" THE STEEL POLE ARE REQUIRED.

A PULL BOX WILL BE REQUIRED WHEREVER CONDUIT CHANGES DIRECTION AND WHERE MULTIPLE LIGHTS ARE INSTALLED ON A SINGLE SERVICE. PULLBOX SPACING SHALL NOT EXCEED 200'. (SEE STD. E-3)

LIGHTING STANDARD
P.G.&E. 35-7274

REVISIONS		CITY OF KINGSBURG	STD No.
FEB 2009		STREETLIGHT-LOCAL STREET WITH NO BASE, NO PULL BOX & PVC CONDUIT	E-2

S:\2008\08-056\Kingsburg Standards Update\E-Electrical\E-02.dwg 6-01-09 08:35 AM

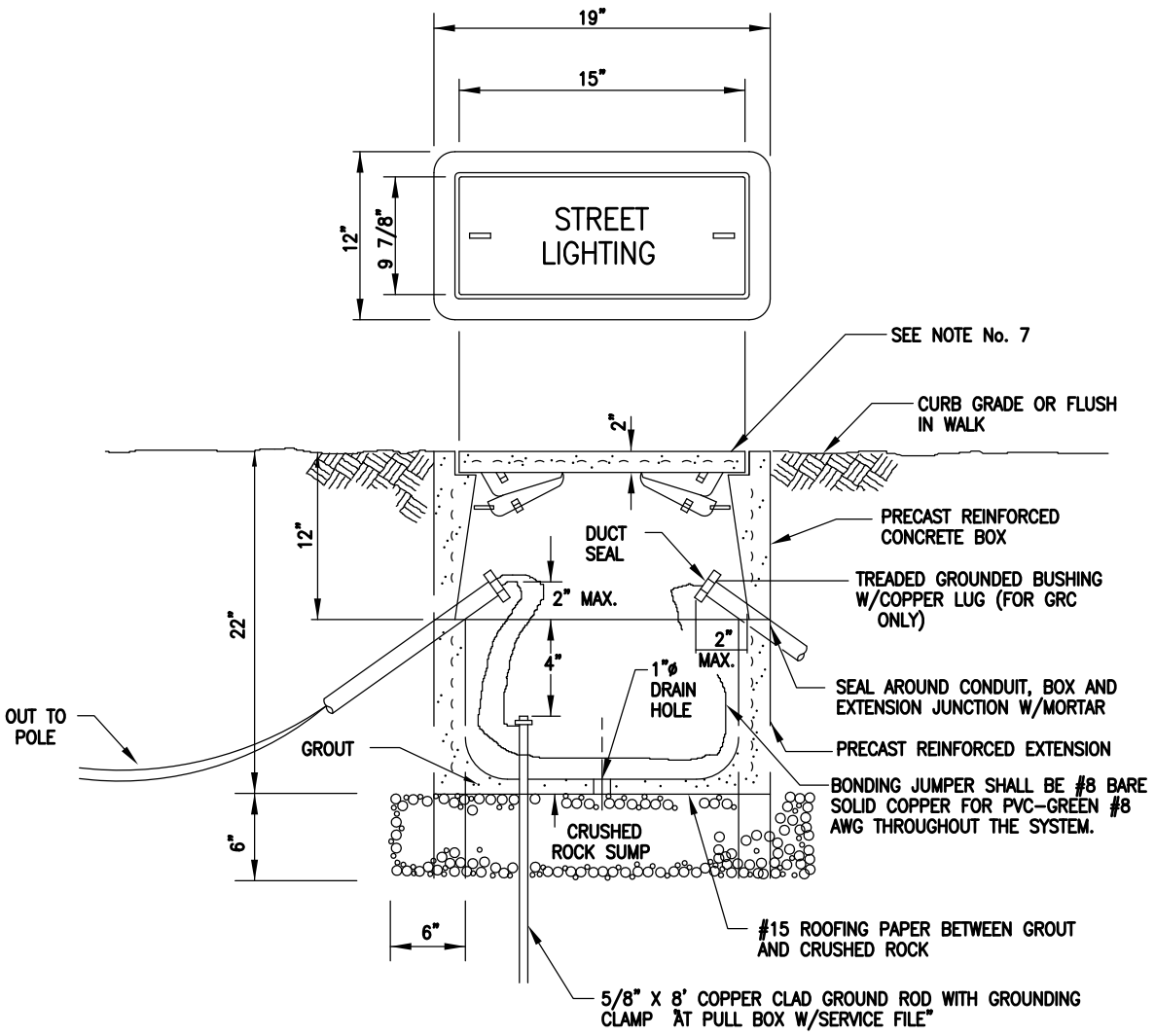

GENERAL NOTES:

1. PULL BOXES SHALL BE #3 1/2 AS PER CAL TRANS STANDARD SPECIFICATIONS OR CHRISTY N-9 OR APPROVED EQUAL.
2. PULL BOXES SHALL GROUTED PRIOR TO INSTALLATION OF CONDUCTORS, SLOPED TOWARD THE DRAIN HOLE. PLACE A LAYER OF ROOFING PAPER BETWEEN THE CRUSHED ROCK AND THE GROUT.
3. PULL LIDS BEFORE POURING CONCRETE AROUND PULL BOXES.
4. WRAP PULL BOX WITH ROOFING PAPER BEFORE BACKFILLING.
5. FUSE AT POINT OF SERVICE SHALL BE 60A IF #6 CONDUCTOR AND 40A IF #8 CONDUCTOR AND SHALL HAVE A TRON TYPE FUSE HOLDER. (SINGLE POLE)
6. INSTALL A ONE-FOOT RING OF CONCRETE, FOUR INCHES DEEP, AROUND THE WRAPPED PULL BOXES INSTALLED IN DIRT AREAS. SLOPED TO DRAIN AWAY FROM THE PULL BOX.
7. PULL BOX LID SHALL BE LOCKJAW SECURITY LID No. ELJ09-N0912 OR EQUAL.

REVISIONS		CITY OF KINGSBURG	STD No.
OCT 10		STREETLIGHTS CONCRETE PULL BOXES	E-3

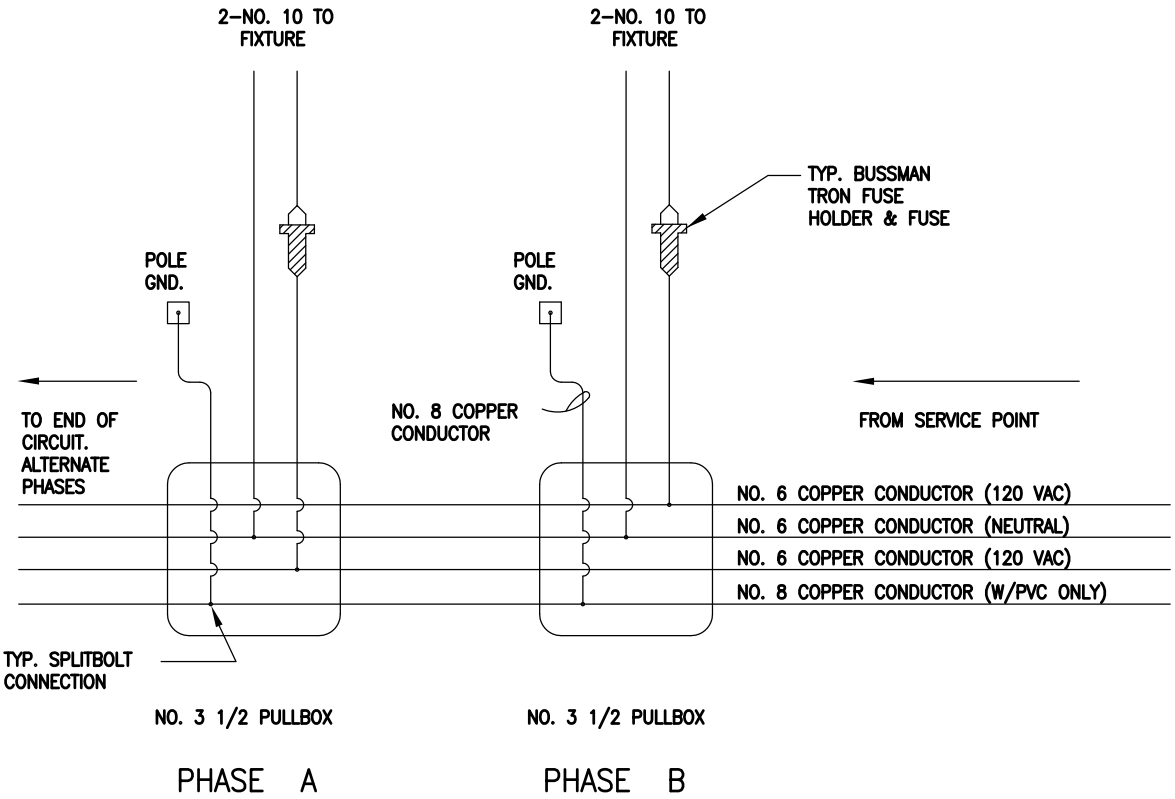

PVC

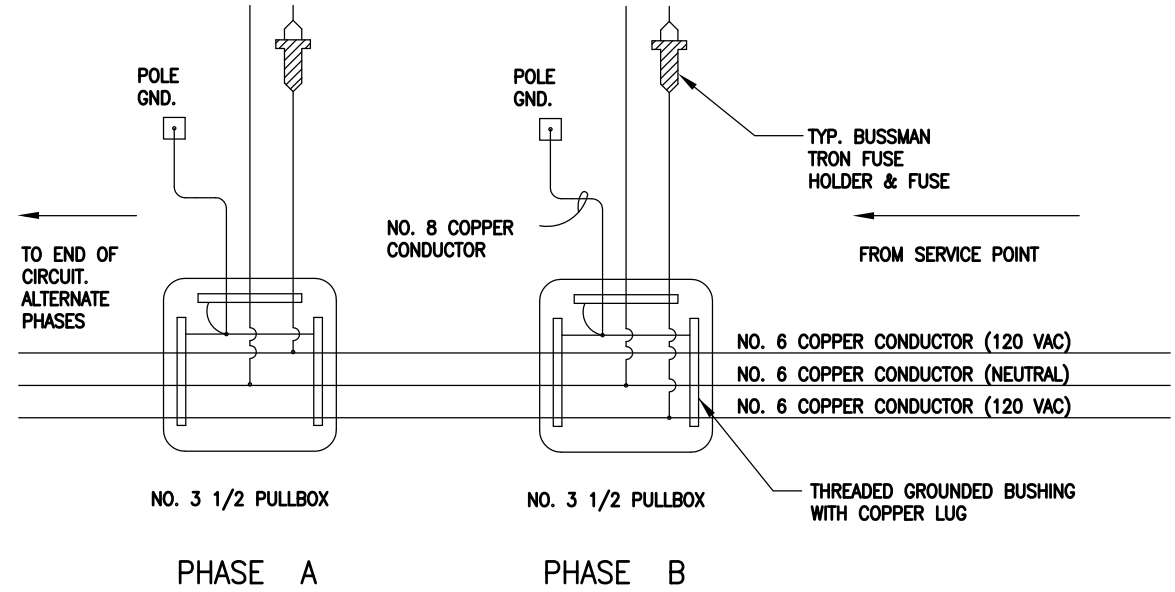

GRC

REVISIONS	
FEB 09	

CITY OF KINGSBURG

STREETLIGHT CONNECTION DIAGRAM

STD No. E-4

S:\2008\08-056\Kingsburg Standards Update\E-Electrical\E-04.dwg 5-27-09 03:53 PM

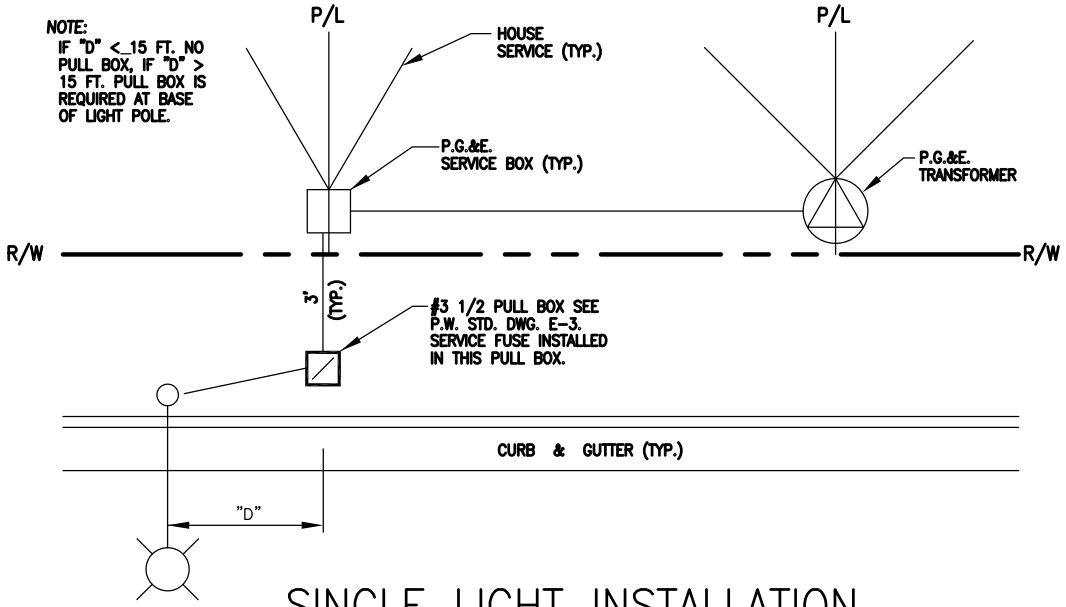

SINGLE LIGHT INSTALLATION

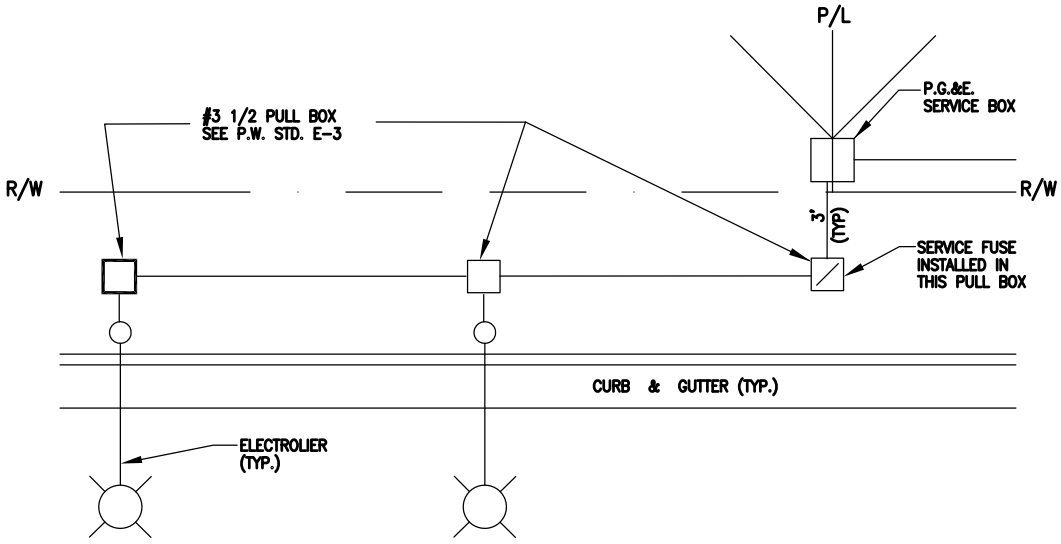

MULTIPLE LIGHT INSTALLATION

1. CONDUIT SHALL BE SCHEDULE 40 PVC ON LOCAL STREETS AND SCHEDULE 80 PVC ON MAJOR STREETS. LOCAL STREET CROSSINGS SHALL BE SCHEDULE 80 PVC, AND MAJOR STREETS CROSSINGS SHALL BE GALVANIZED RIGID CONDUIT.
2. LOCATE STREET LIGHTS ON THE SAME SIDE OF THE STREET AS THE P.G.&E. SERVICE WHEN POSSIBLE.
3. DO NOT LOCATE THE PULL BOXES ABOVE THE JOINT TRENCH.
4. PULL BOX SPACING SHALL NOT EXCEED 200' AND SHALL BE REQUIRED IN ALL CONDUIT CHANGE OF DIRECTION.

REVISIONS		CITY OF KINGSBURG	STD No.
FEB 09		STREETLIGHT LAYOUT	E-5

S:\2008\08-056\Kingsburg Standards Update\E-Electrical\E-05.dwg 5-27-09 03:54 PM

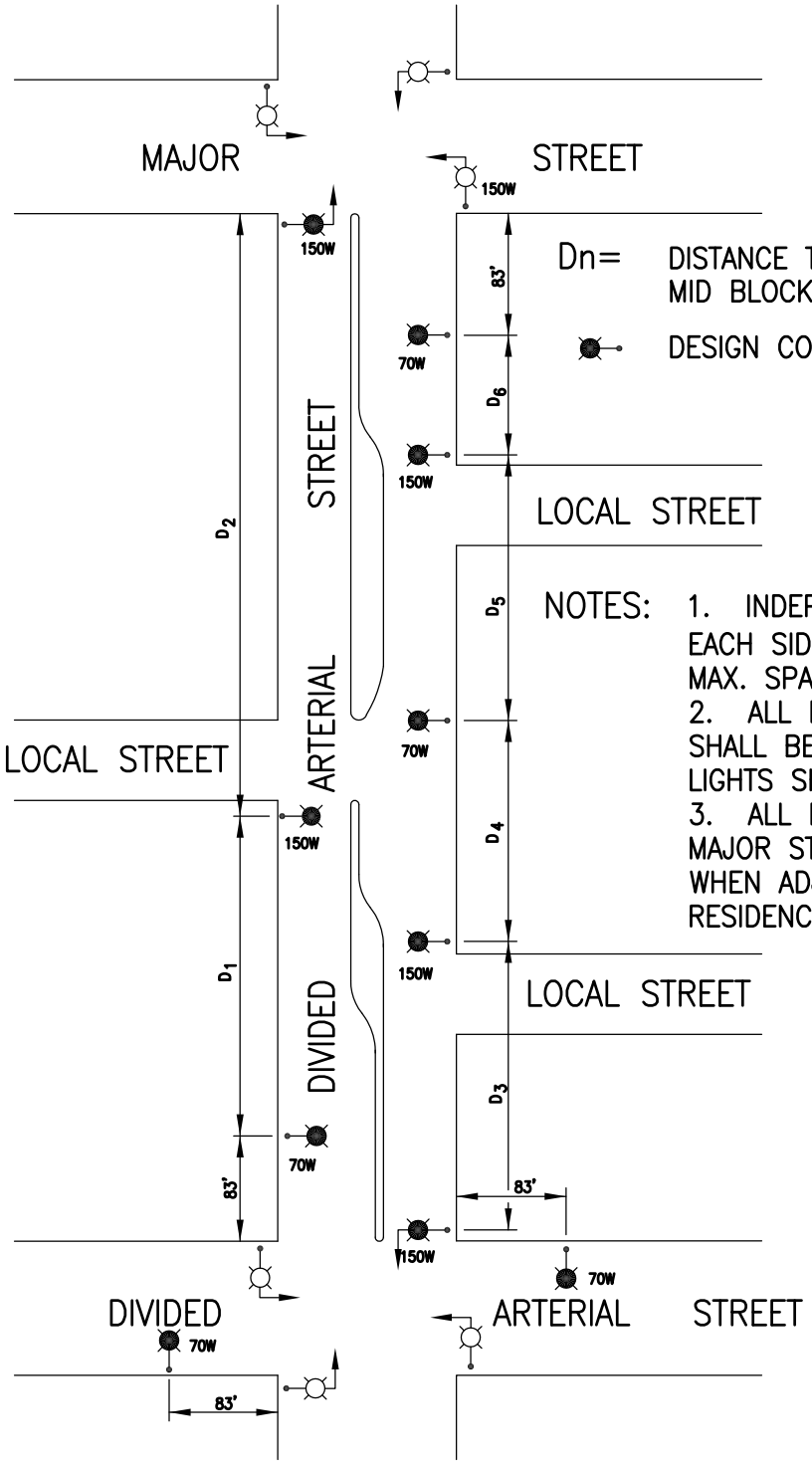

Dn= DISTANCE TO BE DIVIDED FOR MID BLOCK LIGHTING.

DESIGN CONTROL STREET LIGHT

NOTES:

1. INDEPENDENT SYSTEMS ON EACH SIDE WITH 250' MIN, 350' MAX. SPACING ON EACH SIDE.
2. ALL INTERSECTION LIGHTS SHALL BE 150W, MID BLOCK LIGHTS SHALL BE 70W.
3. ALL LIGHTS ON ARTERIAL OR MAJOR STREETS TO BE HOODED WHEN ADJACENT TO FRONT FACING RESIDENCES.

REVISIONS		CITY OF KINGSBURG	STD No.
FEB 09		STREETLIGHT–PLACEMENT DIVIDED ARTERIAL STREETS	E–6

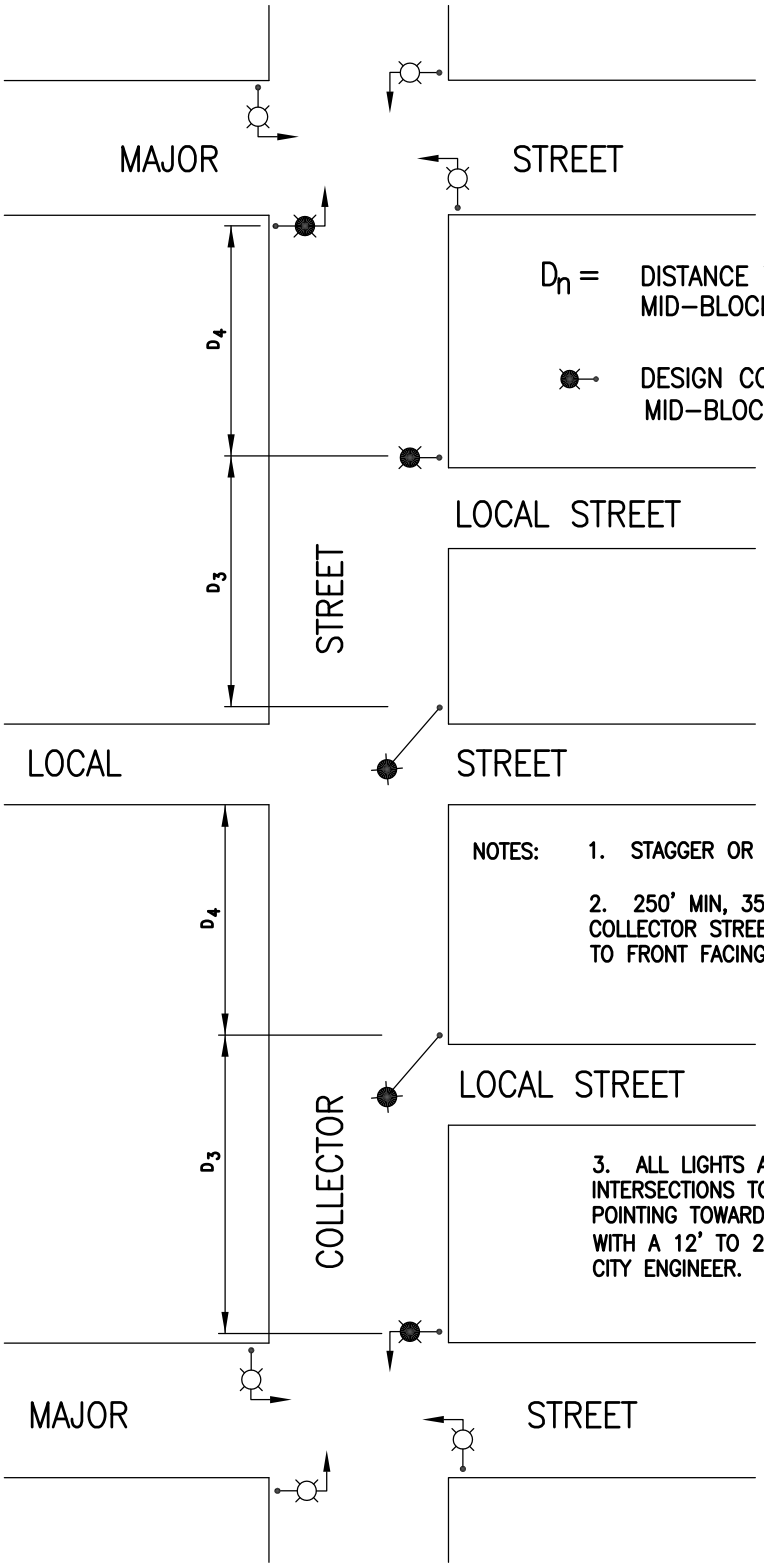

D_n = DISTANCE TO BE DIVIDED FOR MID-BLOCK LIGHTING.

DESIGN CONTROL STREET LIGHT-150W
MID-BLOCK LIGHTS SHALL BE 70W

NOTES:

1. STAGGER OR ALL ON ONE SIDE.
2. 250' MIN, 350' MAX SPACING ALL LIGHTS ON COLLECTOR STREETS TO BE HOODED WHEN ADJACENT TO FRONT FACING RESIDENCES.
3. ALL LIGHTS AT FOUR-WAY LOCAL STREET INTERSECTIONS TO BE PLACED ON NORTHEAST CORNER, POINTING TOWARDS THE CENTER OF THE INTERSECTION, WITH A 12' TO 20' MAST ARM, AS DIRECTED BY THE CITY ENGINEER.

REVISIONS		CITY OF KINGSBURG	STD No.
FEB 09		STREETLIGHT-PLACEMENT COLLECTOR STREET	E-7

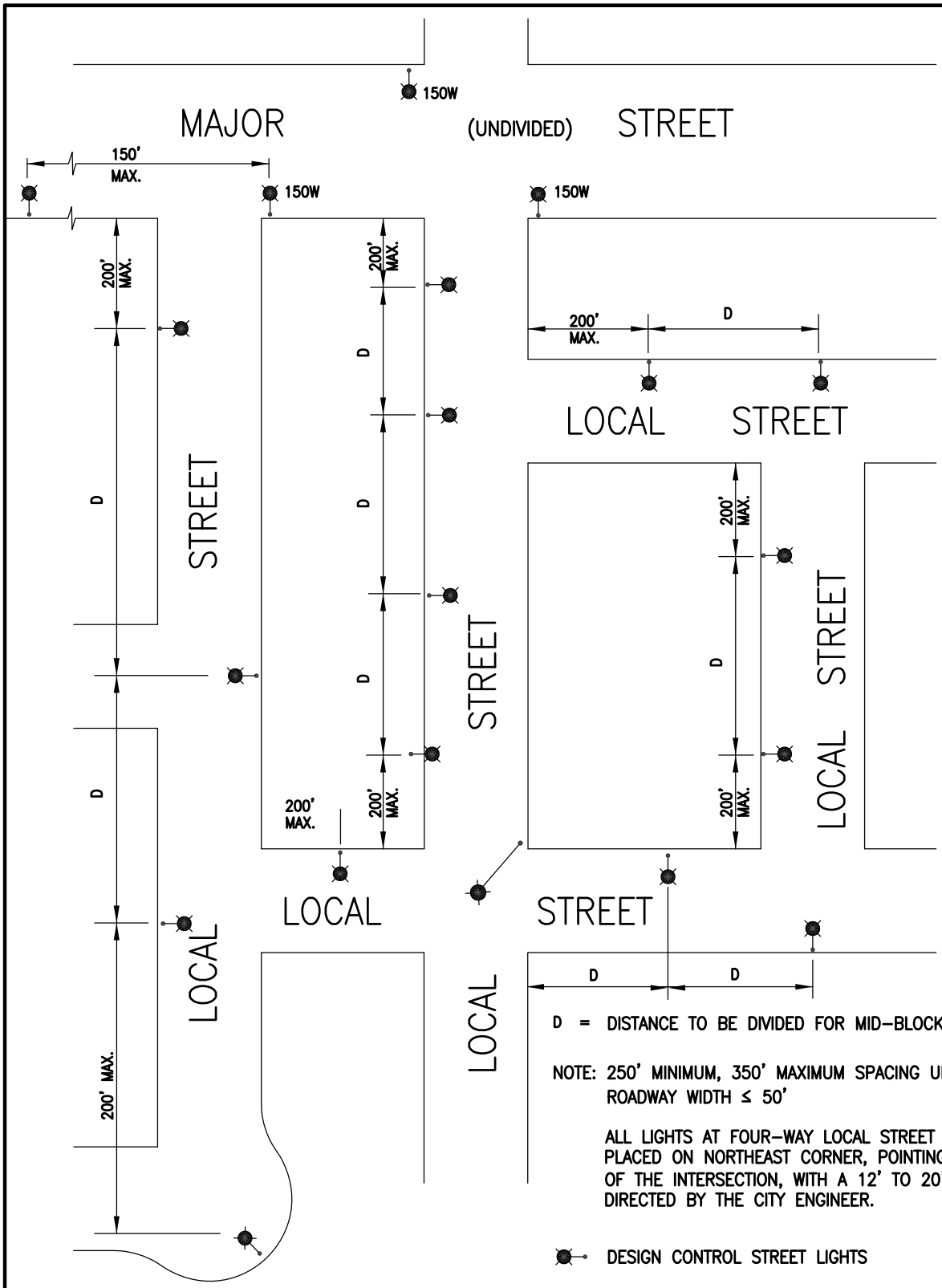

D = DISTANCE TO BE DIVIDED FOR MID-BLOCK LIGHTING

NOTE: 250' MINIMUM, 350' MAXIMUM SPACING UNIT TO UNIT
ROADWAY WIDTH ≤ 50'

ALL LIGHTS AT FOUR-WAY LOCAL STREET INTERSECTIONS TO BE PLACED ON NORTHEAST CORNER, POINTING TOWARDS THE CENTER OF THE INTERSECTION, WITH A 12' TO 20' MAST ARM, AS DIRECTED BY THE CITY ENGINEER.

DESIGN CONTROL STREET LIGHTS

ALL LIGHTS ON LOCAL STREETS SHALL BE 70W

REVISIONS		CITY OF KINGSBURG	STD No.
FEB 09		STREETLIGHTS–PLACEMENT LOCAL STREETS	E–8

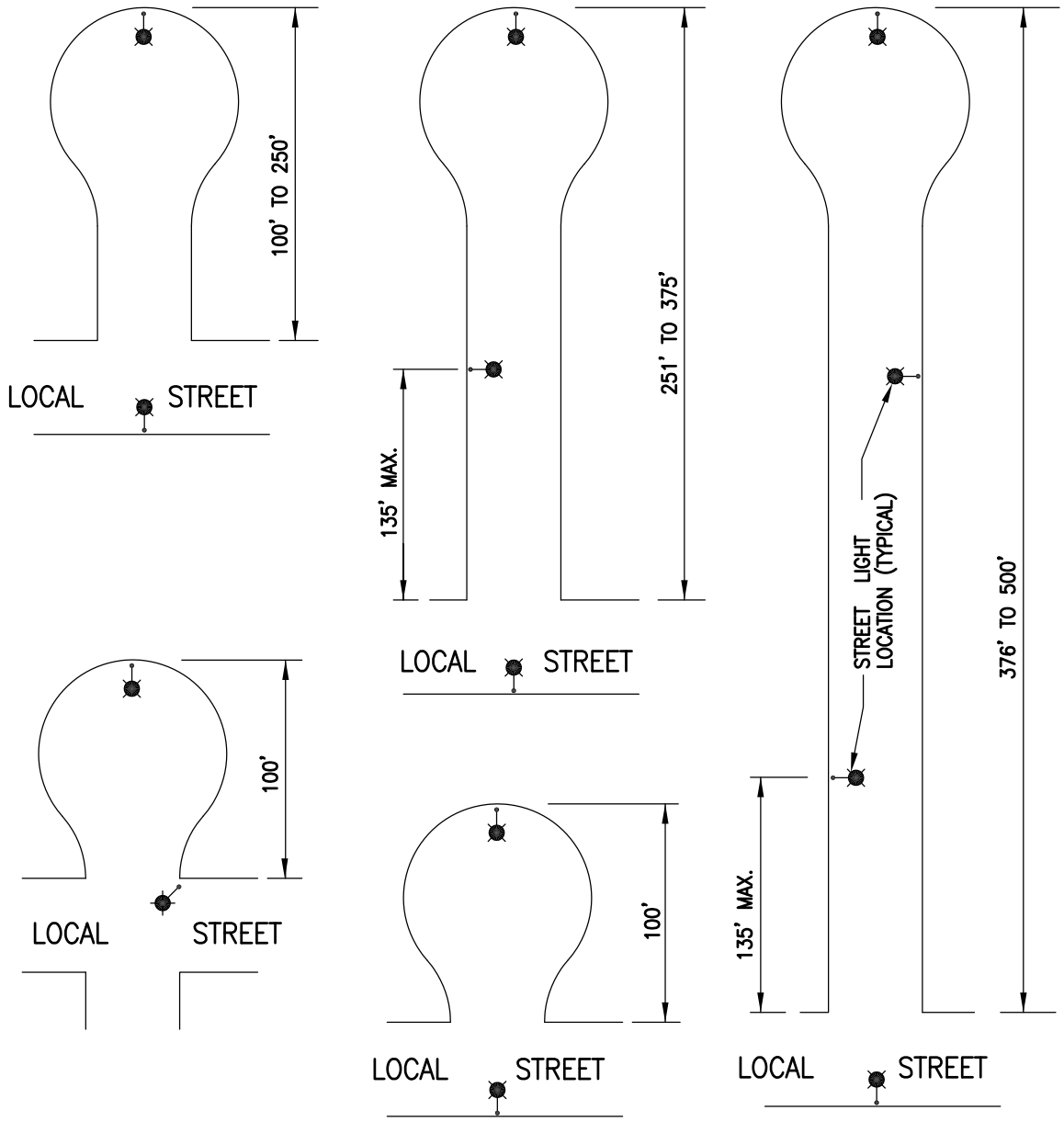

NOTE: STREET LIGHT TO BE PLACED AT THE END OF EACH CUL-DE-SAC

REVISIONS		CITY OF KINGSBURG	STD No.
FEB 09		STREETLIGHT – PLACEMENT CUL-DE-SAC STREETS	E-9

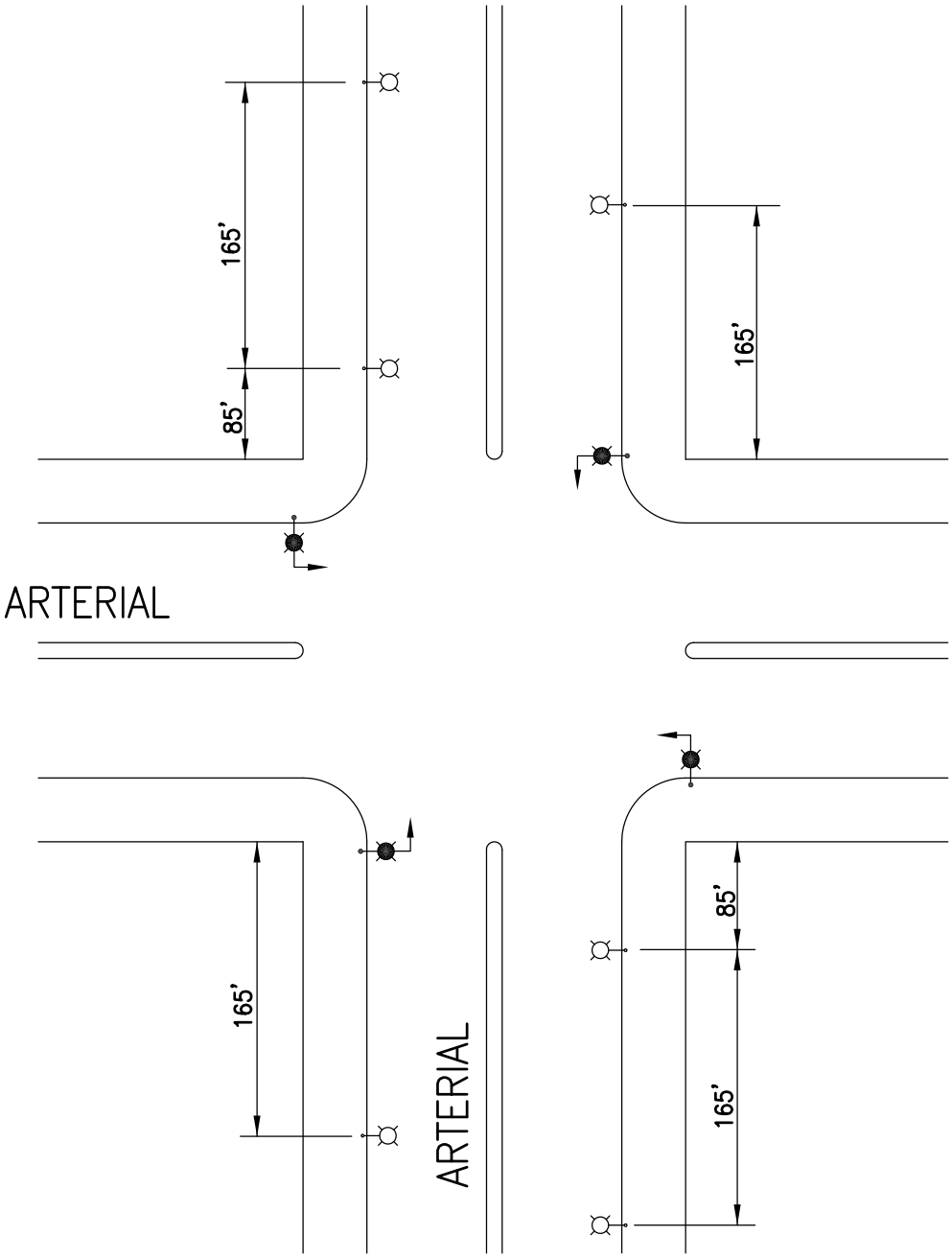

● = SAFETY LIGHTING (200W)

¤ = ENTRANCE AND EXIT LIGHTS (70W)

NOTE: SAFETY LIGHTS & APPROACH LIGHTS (ENTRANCE & EXIT) TO BE ON SEPARATE BREAKERS OF SAME CONTACTOR.

REVISIONS		CITY OF KINGSBURG	STD No.
FEB 09		STREETLIGHTS–PLACEMENT ARTERIAL INTERSECTION	E–10

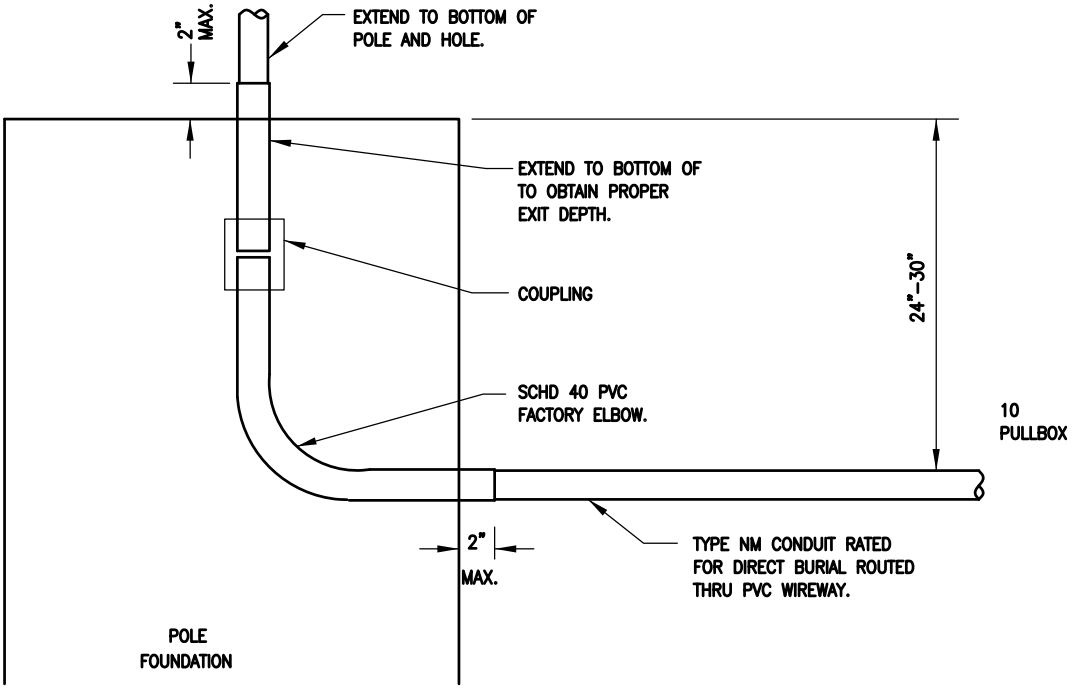

POLE TYPE	PVC	NM
PPBP	2"	1"
POLE TYPE	2.5"	1.5"
POLE TYPE	2.5"	1.5"
POLE TYPE	3"	2"

S:\2008\08-056\Kingsburg Standards Update\E-Electrical\E-11.dwg 5-27-09 03:57 PM

REVISIONS	
FEB 09	

CITY OF KINGSBURG

STREETLIGHTS
FOUNDATION WIRE-WAY DETAIL

STD No.
E-11

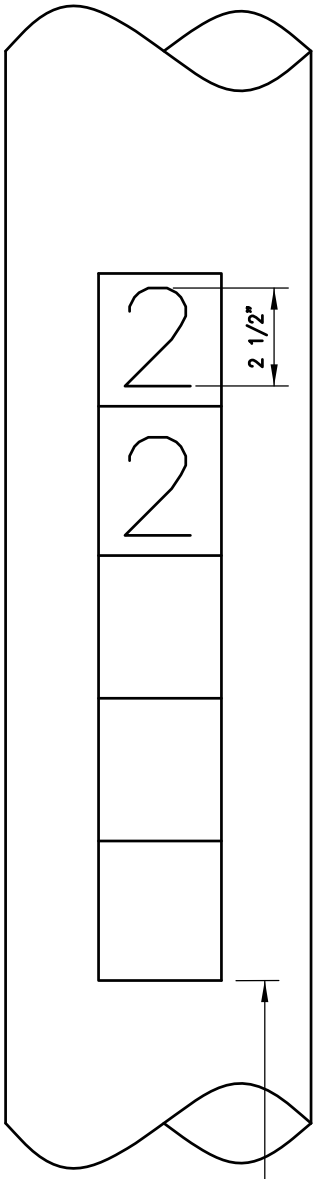

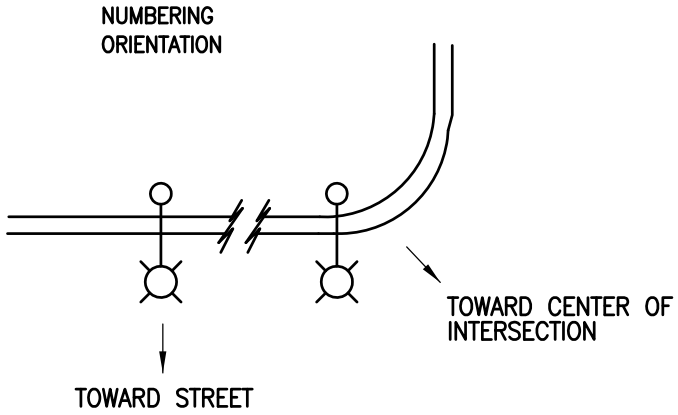

NOTES:

1. FOR METAL POLES APPLY TO CLEAN SURFACE.
2. BACKING PLATE SHALL BE ALMETEK EMP-2.5V5 OR APPROVED EQUAL.
3. FOR WOOD POLES USE EMBOSSED ALUMINUM BACKING PLATE SECURED W/ 1-1/2" ALUMINUM ROOFING NAILS
4. NUMBERALS SHALL BE ALMETEK PS-2.5 SERIES OR APPROVED EQUAL.
5. PRESSURE SENSITIVE MARKERS OF REFLECTIVE SCOTCHLITE BLACK ON WHITE.

9' FROM GRADE/SIDEWALK ELEVATION, ADJUST AS NEEDED TO CLEAR HARDWARE OR APPURTENANCES.

REVISIONS		CITY OF KINGSBURG	STD No.
FEB 09		STREETLIGHT POLE NUMBERING	E-12

S:\2008\08-056\Kingsburg Standards Update\E-Electrical\E-12.dwg 5-27-09 03:58 PM

NOTE:
SERVICE CABINET SHALL BE TESCO 23-000 LBS UNMETERED OR APPROVED EQUIVALENT.

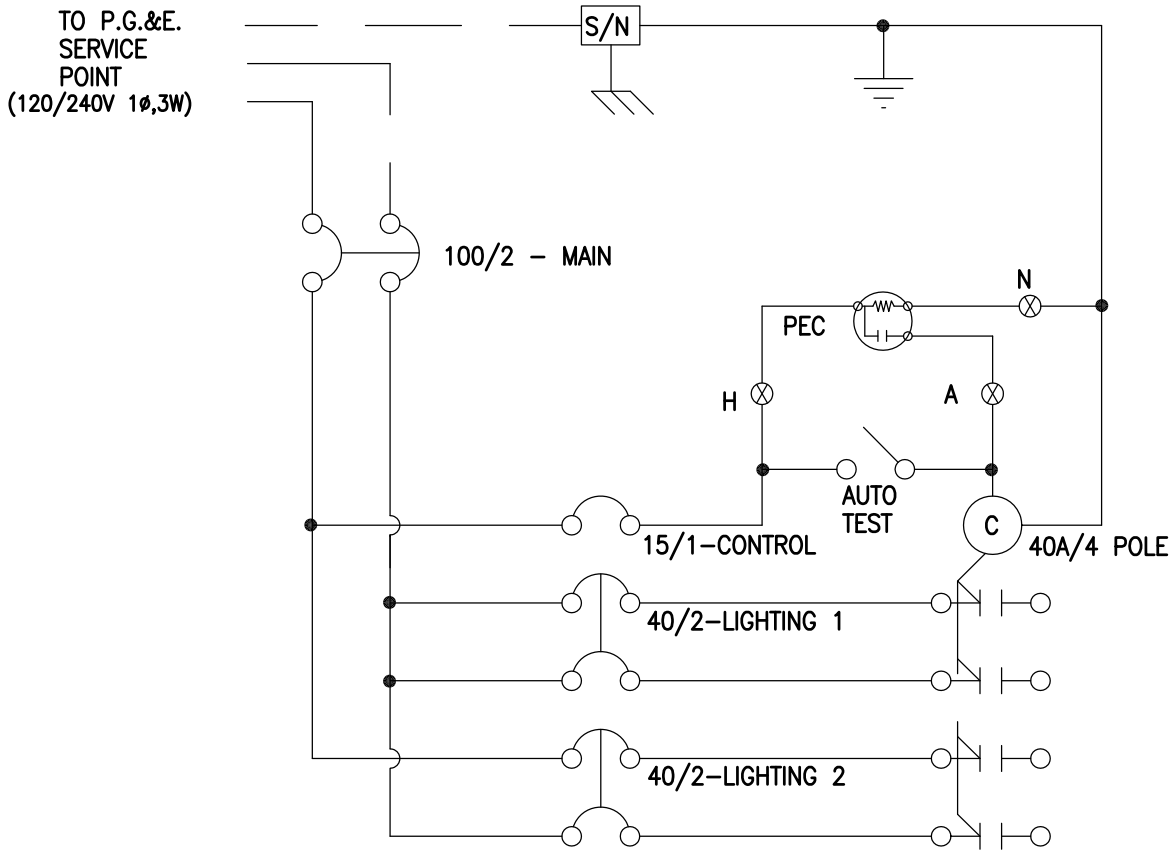

SERVICE PEDESTAL SCHEMATIC

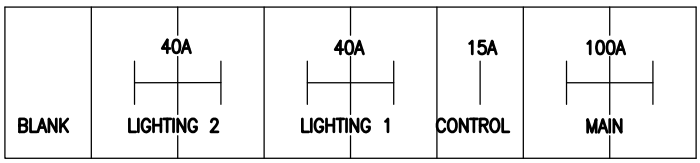

SWITCH LOCATION

REVISIONS	
FEB 09	

CITY OF KINGSBURG

STREETLIGHT WIRING

STD No. E-13

S:\2008\08-056\Kingsburg Standards Update\E-Electrical\E-13.dwg 5-27-09 03:58 PM

NOTE:
SERVICE CABINET SHALL BE TESCO 21-100 LBS METERED/UNMETERED OR APPROVED EQUAL.

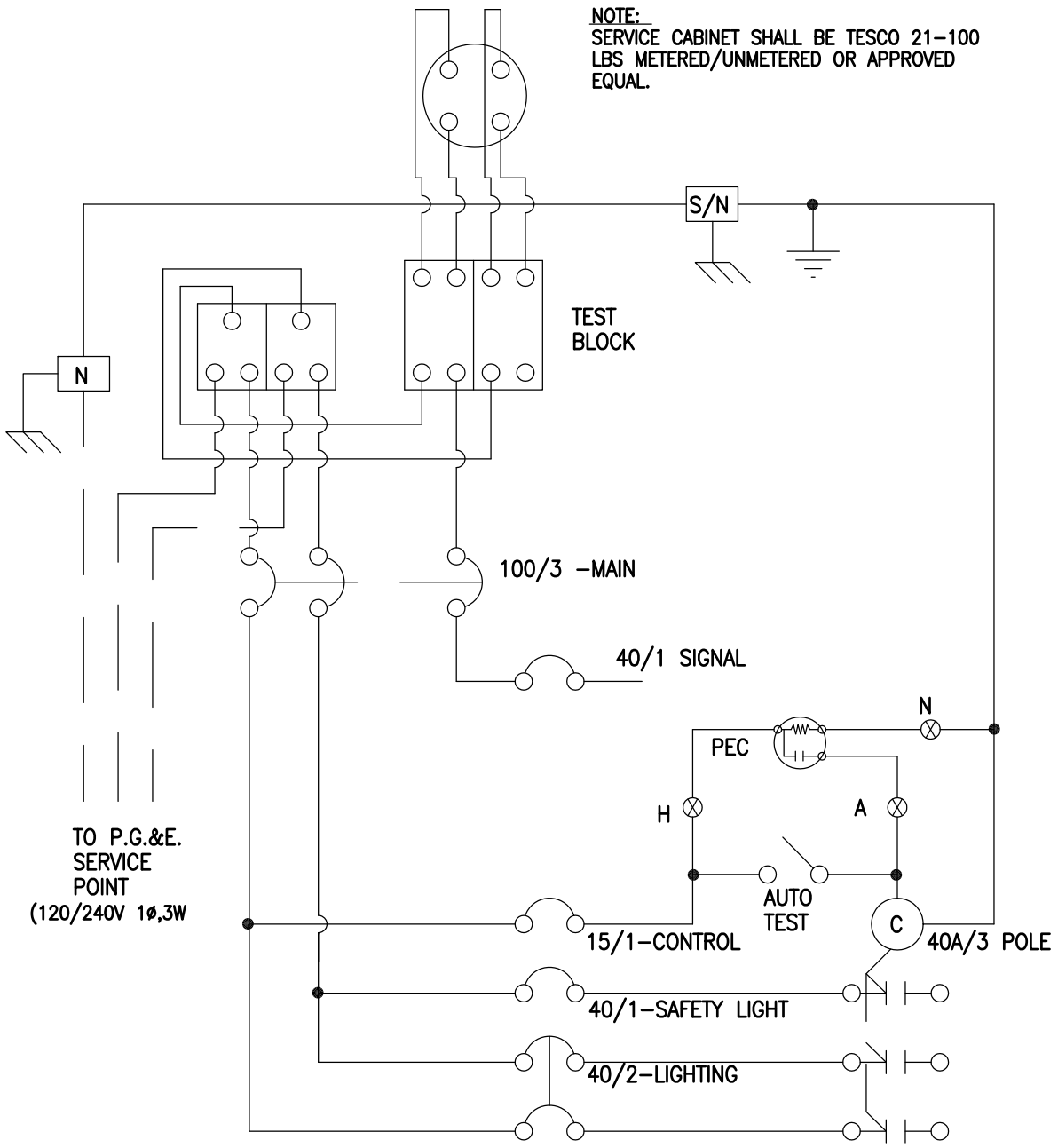

SERVICE PEDESTAL SCHEMATIC

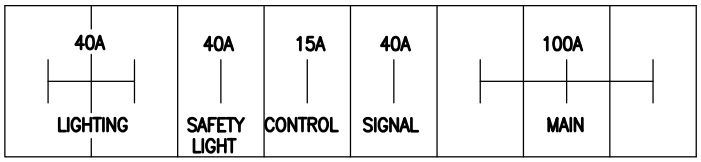

SWITCH LOCATION

REVISIONS	
FEB 09	

CITY OF KINGSBURG

SIGNAL & STREETLIGHT COMBINATION WIRING

STD No. E-14

S:\2008\08-056\Kingsburg Standards Update\E-Electrical\E-14.dwg 5-27-09 03:59 PM

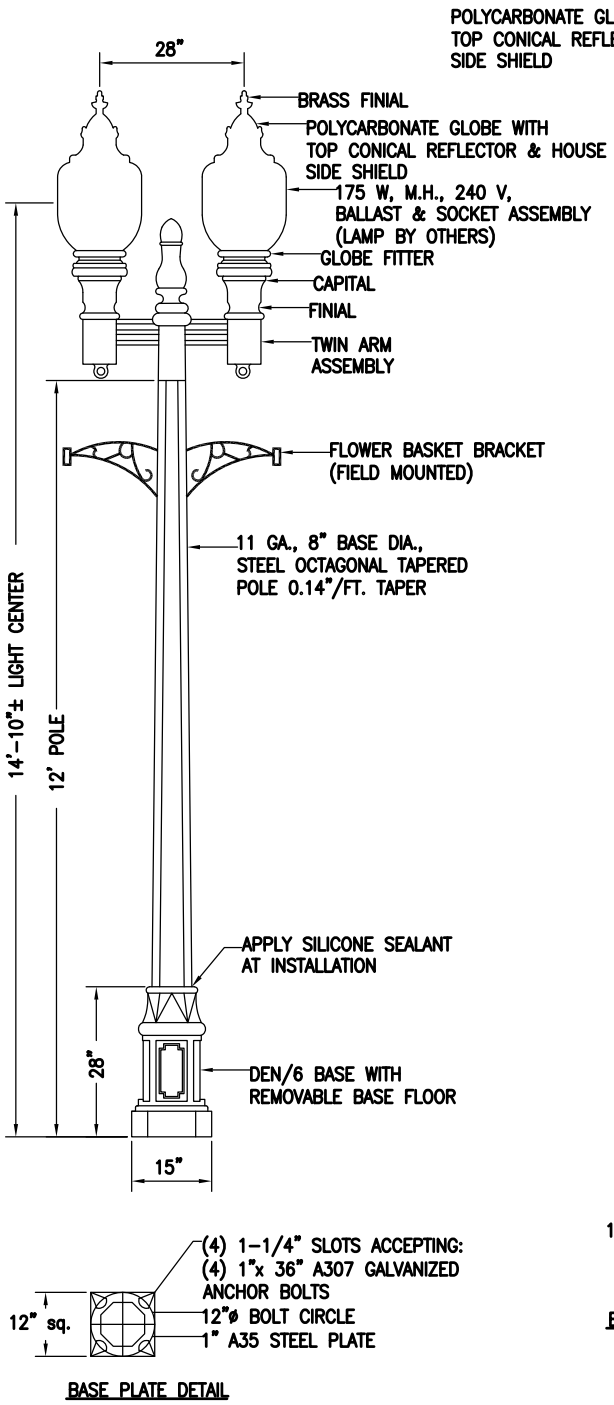

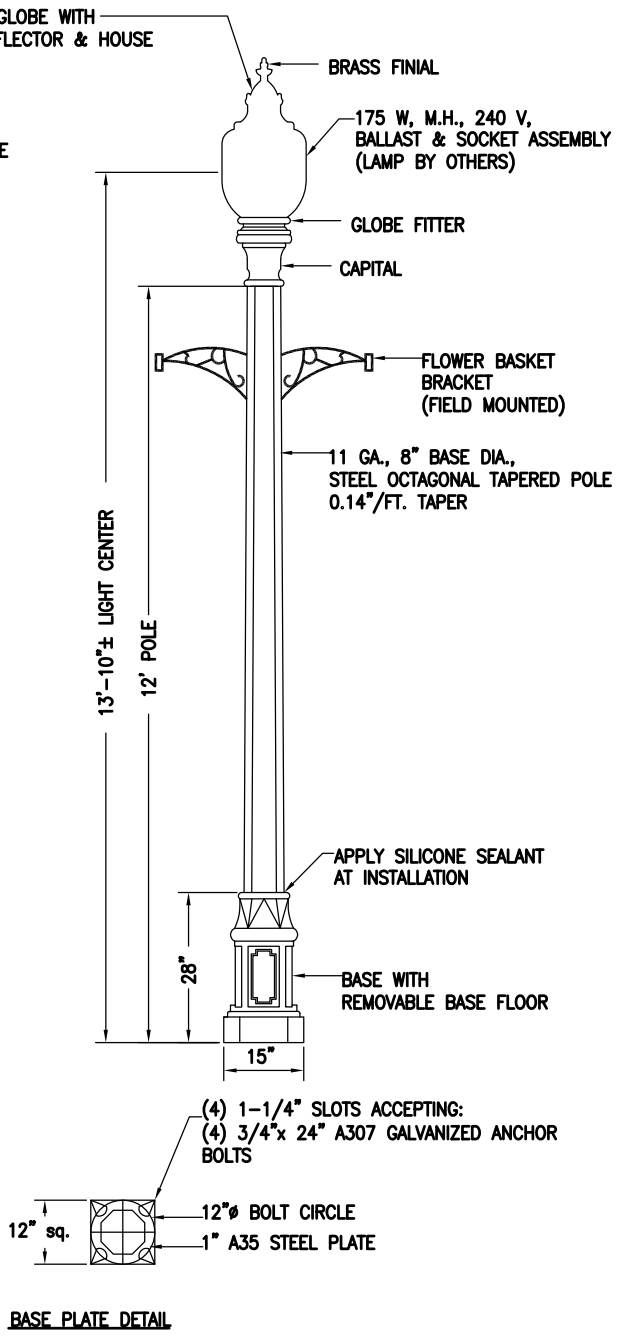

NOTES

1. ALL BULBS SHALL BE 70 WATT HIGH PRESSURE SODIUM VAPOR EMITTING A SOFT YELLOW LIGHT PATTERN.
2. DECORATIVE LIGHTING SHALL ONLY BE USED WHEN APPROVED BY CITY. LIGHTING INTENSITY SHALL MATCH THE EQUIVALENT OF TRADITIONAL STREET LIGHT AS SHOWN IN STD. DWG. E-1 AND E-2.
3. ALL CAST IRON AND STEEL LIGHT PARTS ARE TO BE FACTORY POWDER COATED BLACK PER CITY SPECIFICATIONS.

REVISIONS		CITY OF KINGSBURG	STD No.
FEB 09		DECORATIVE LIGHTING	E-15

LANDSCAPE

L-1 Vine on Block Wall
L-2 Tree Planting Detail
L-3 Shrub Planting Detail
L-4 Landscape Gate Valve
L-5 Irrigation Sleeve
L-6 Irrigation Trenching Detail
L-7 Pop Up Rotor Head
L-8 Irrigation Controller
L-9 Root Watering System
L-10 Tree Bubbler in Root Watering System
L-11 Pop Up Spray Head
L-12 Remote Control Valve-Angle
L-13 Remote Control Valve-Globe
L-14 Solar Irrigation Controller
L-15 Backflow Preventer Cage

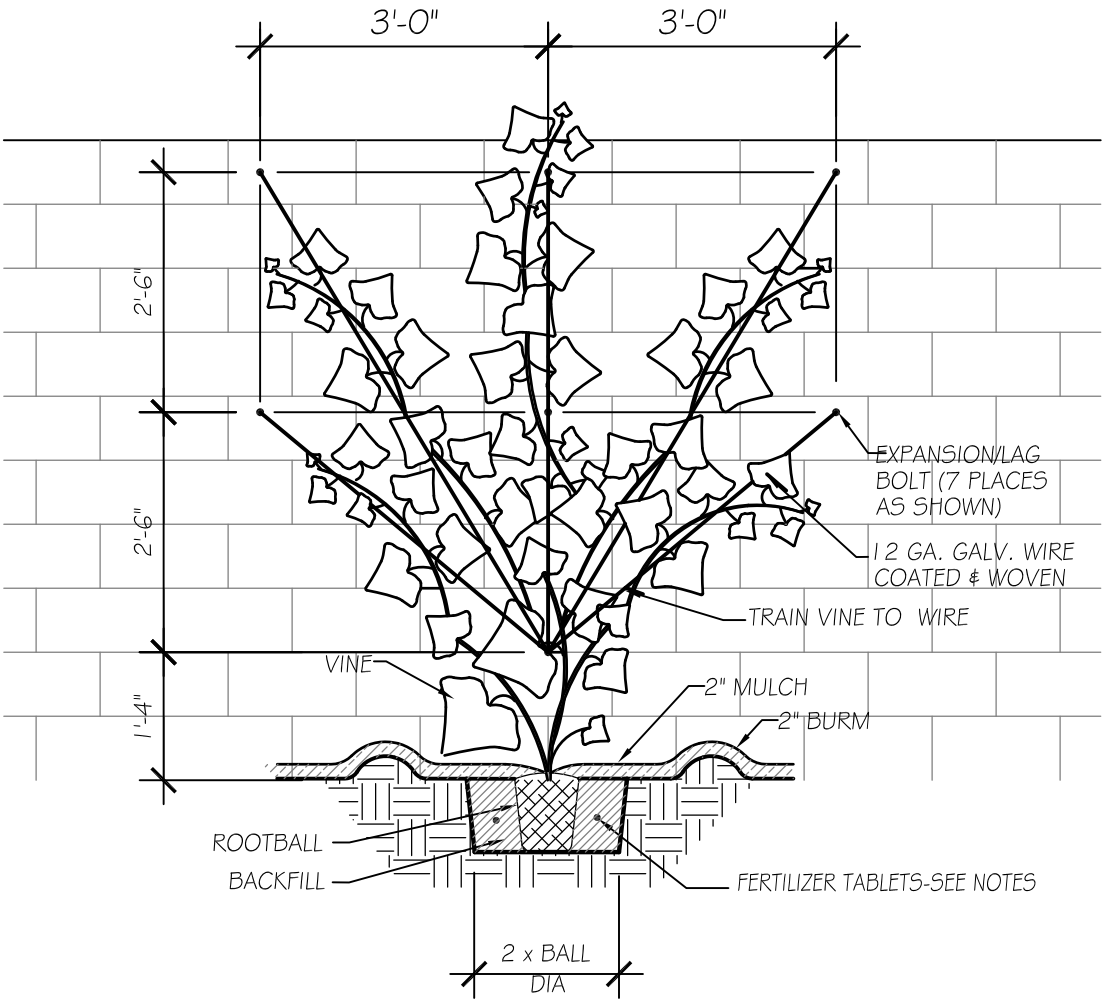

REVISIONS	
FEB 09	

CITY OF KINGSBURG

VINE ON BLOCK WALL

STD No.

L–1

NOTES:

1. PLANTING DEPTH TO BE DICTATED BY POINT OF FIRST ROOT FLAIR (EXCLUDING ADVENTITOUS ROOTS) ROOTBALL TO BE 1" ABOVE FIN. GRADE BY END OF MAINT. PERIOD

2. A LINE DRAWN BETWEEN THE LODGEPOLES SHALL BE AT RIGHT ANGLES TO THE WIND DIRECTION.

3. IF APPLICABLE, FORM A 2" HIGH SOIL BURM APPROXIMATELY 2' AWAY FROM TRUNK OF TREE.

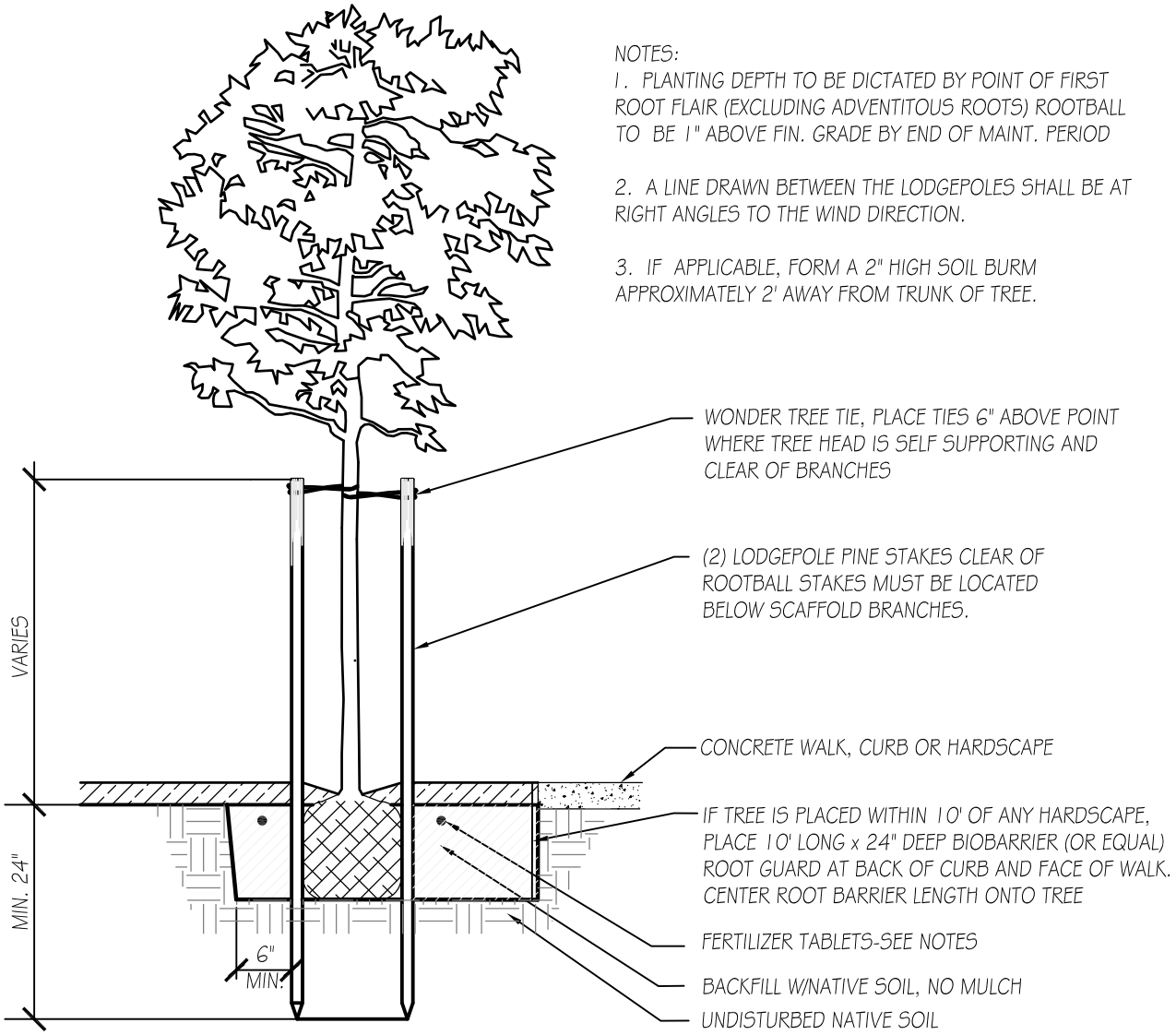

REVISIONS		CITY OF KINGSBURG	STD No.
FEB 09		TREE PLANTING DETAIL	L-2

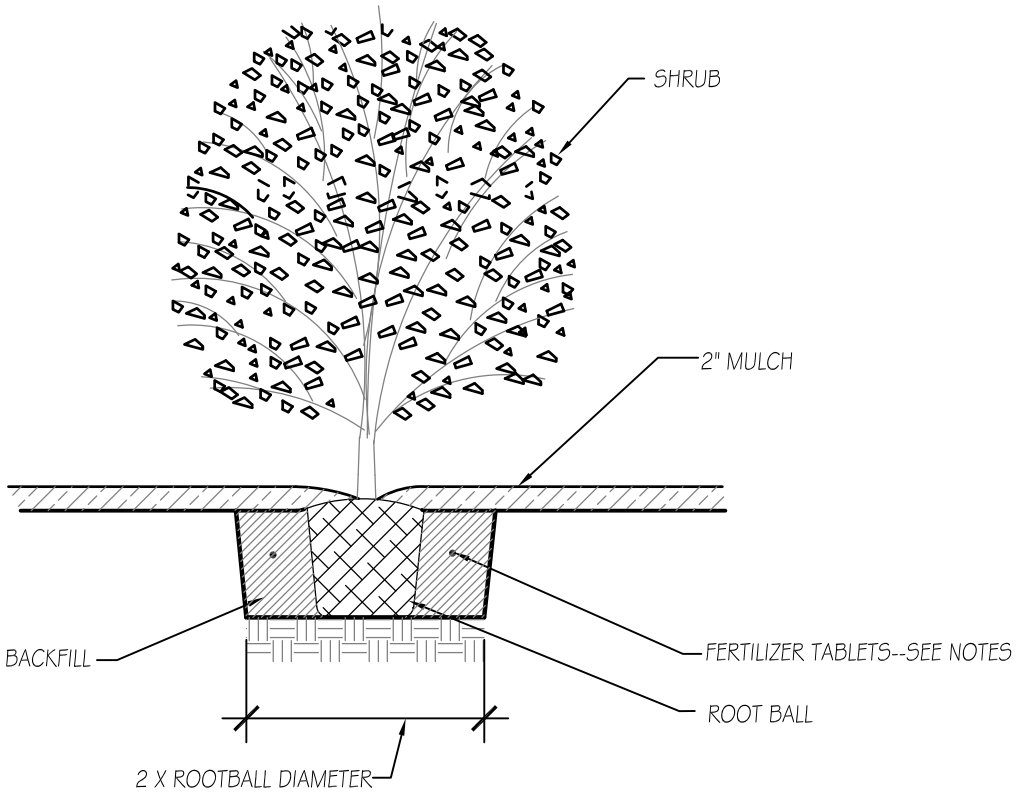

REVISIONS		CITY OF KINGSBURG	STD No.
FEB 09		SHRUB PLANTING DETAIL	L-3

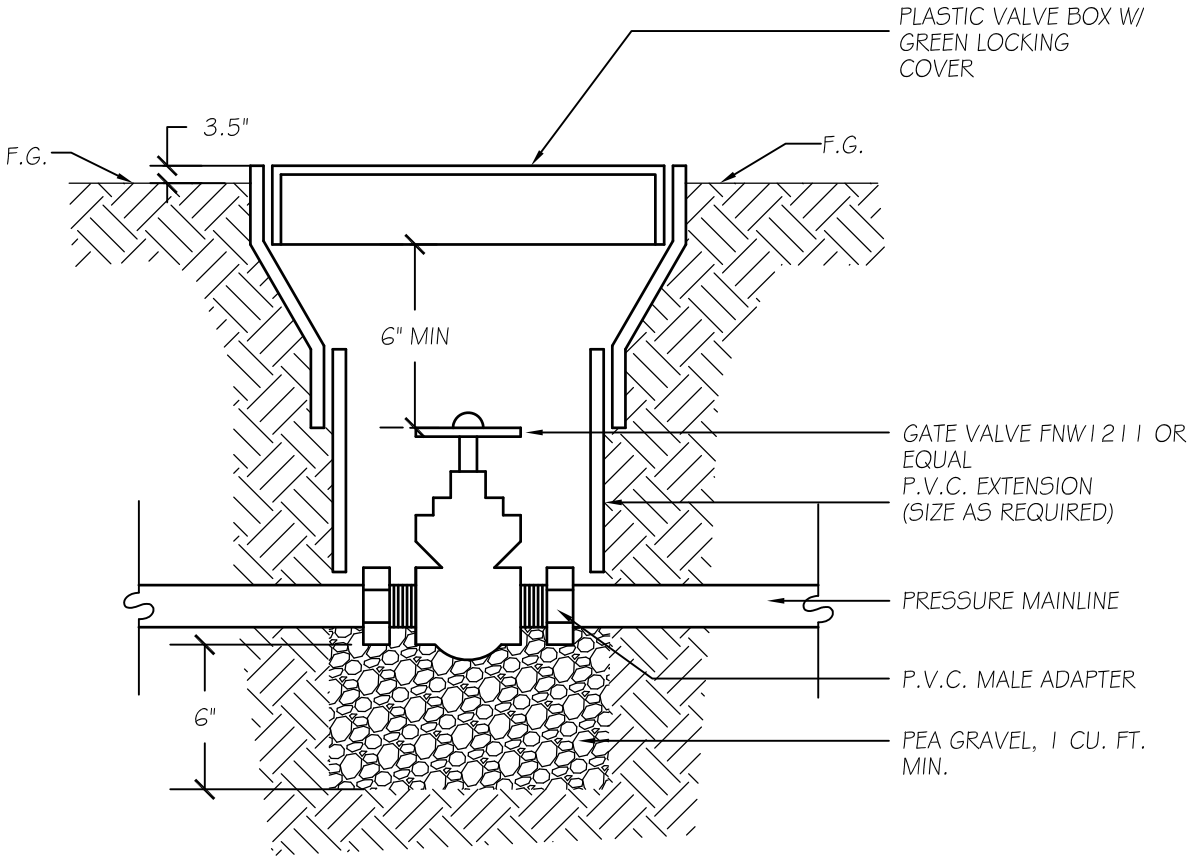

REVISIONS		CITY OF KINGSBURG	STD No.
FEB 09		LANDSCAPE GATE VALVE	L-4

NOTE:
90% COMPACTION REQUIRED ON SOIL BACKFILL

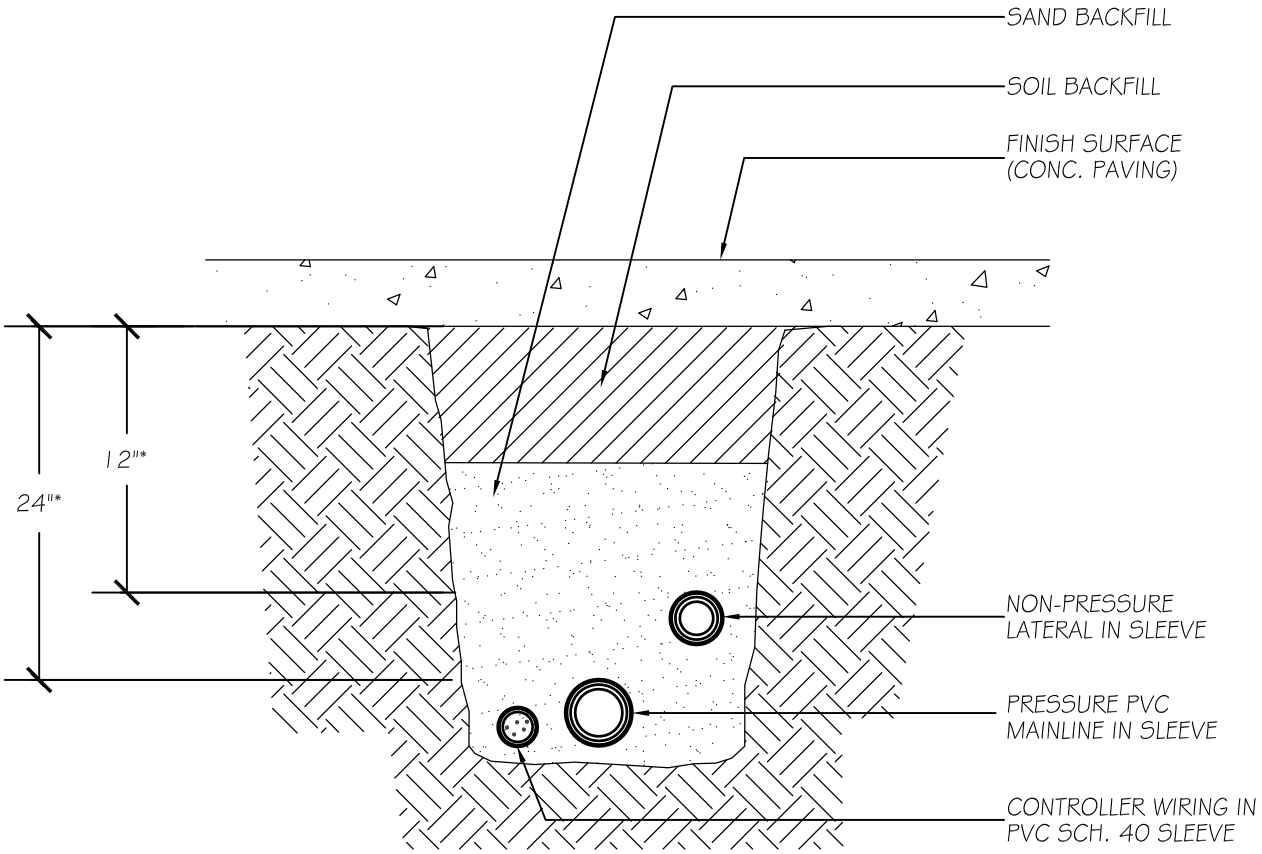

REVISIONS		CITY OF KINGSBURG	STD No.
FEB 09		IRRIGATION SLEEVE	L-5

NOTE:
ALL SOLVENT WELD PIPE SHALL BE SNAKED INTO TRENCHES TO ALLOW FOR EXPANSION & CONTRACTION

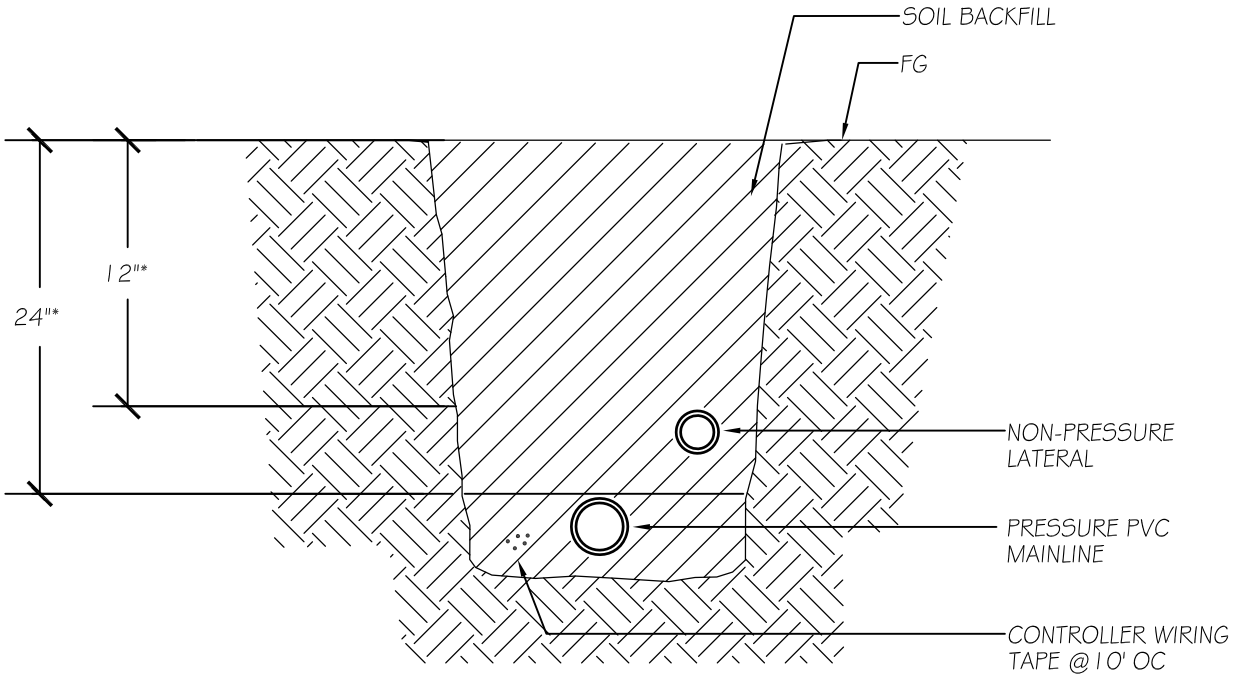

REVISIONS		CITY OF KINGSBURG	STD No.
FEB 09		IRRIGATION TRENCHING DETAIL	L-6

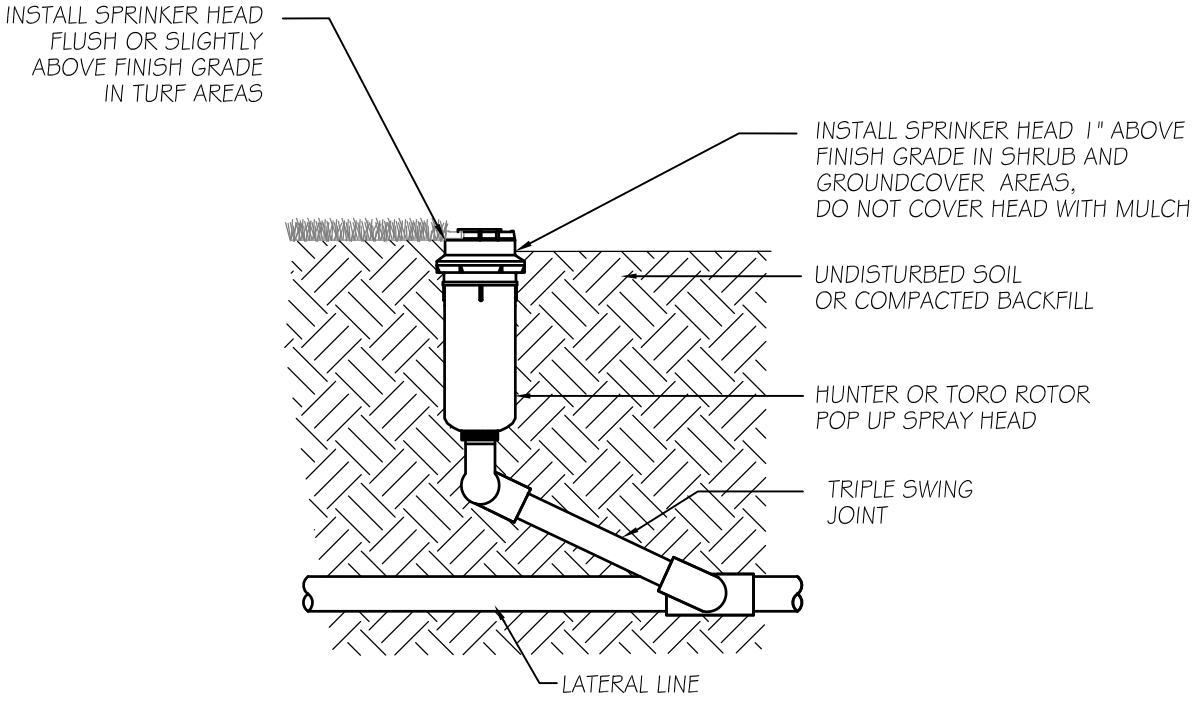

REVISIONS		CITY OF KINGSBURG	STD No.
FEB 09		POP UP ROTOR HEAD	L-7

NOTES:
1. INSTALL ALL WIRING PER LOCAL CODES.
2. INSTALL CONTROLLER PER MOUNTING INSTRUCTIONS

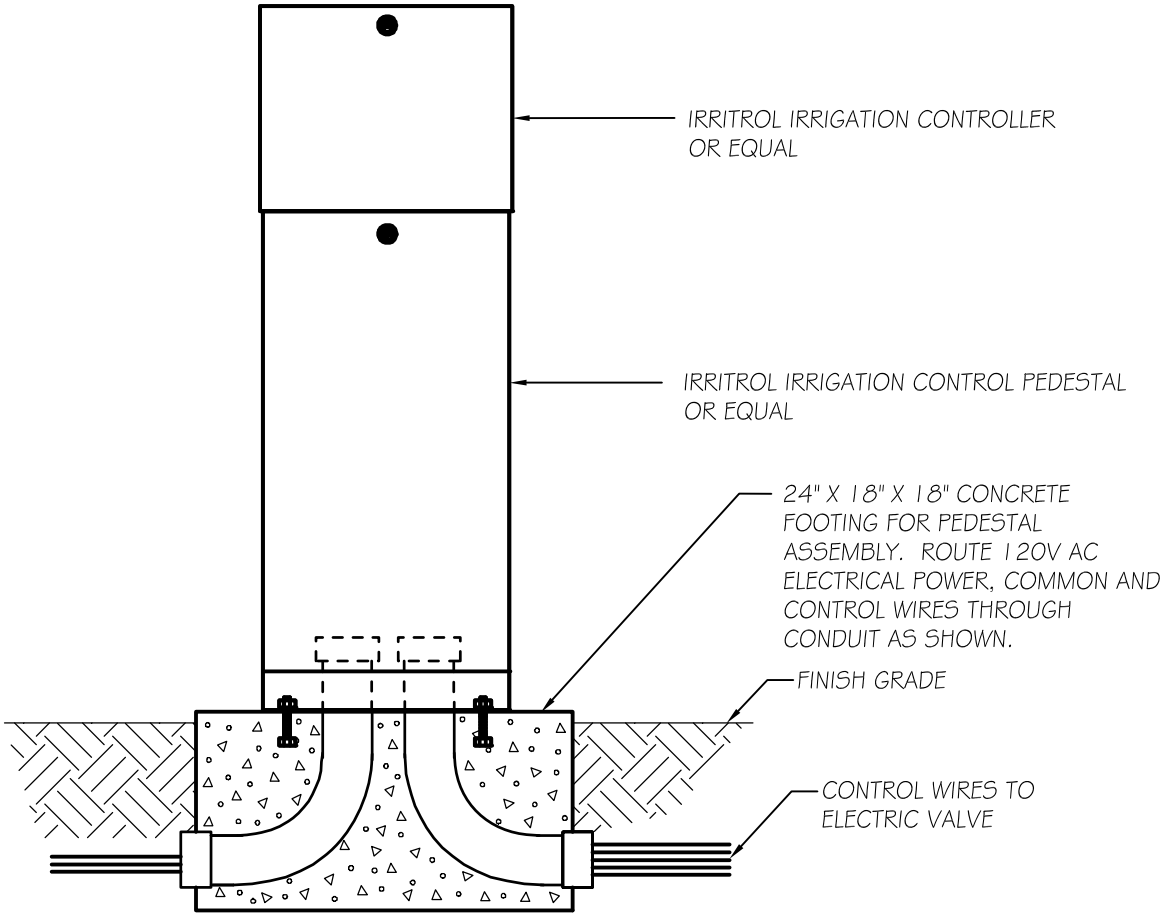

REVISIONS		CITY OF KINGSBURG	STD No.
FEB 09		IRRIGATION CONTROLLER	L-8

NOTE:
POSITION UNITS EVENLY SPACED AROUND ROOT BALL.INSTALL PRODUCT WITH TOP EVEN WITH GROUND SURFACE.

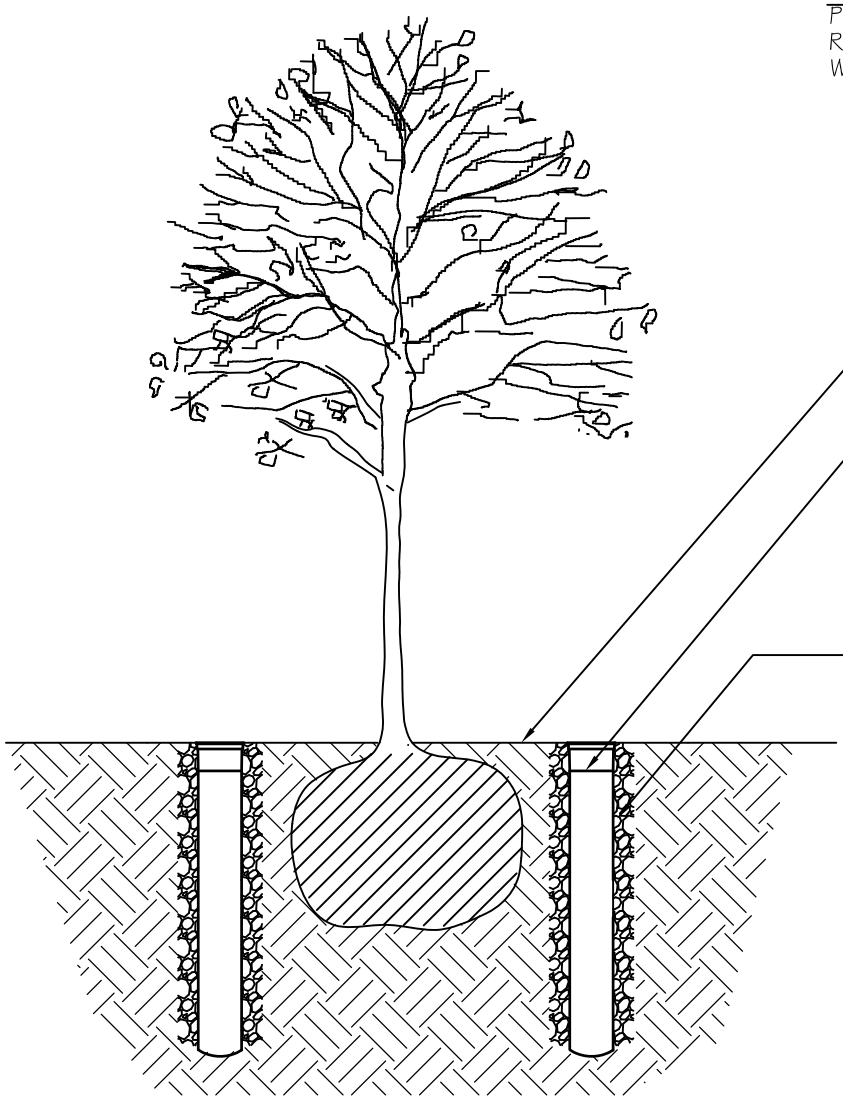

REVISIONS		CITY OF KINGSBURG	STD No.
FEB 09		ROOT WATERING SYSTEM	L-9

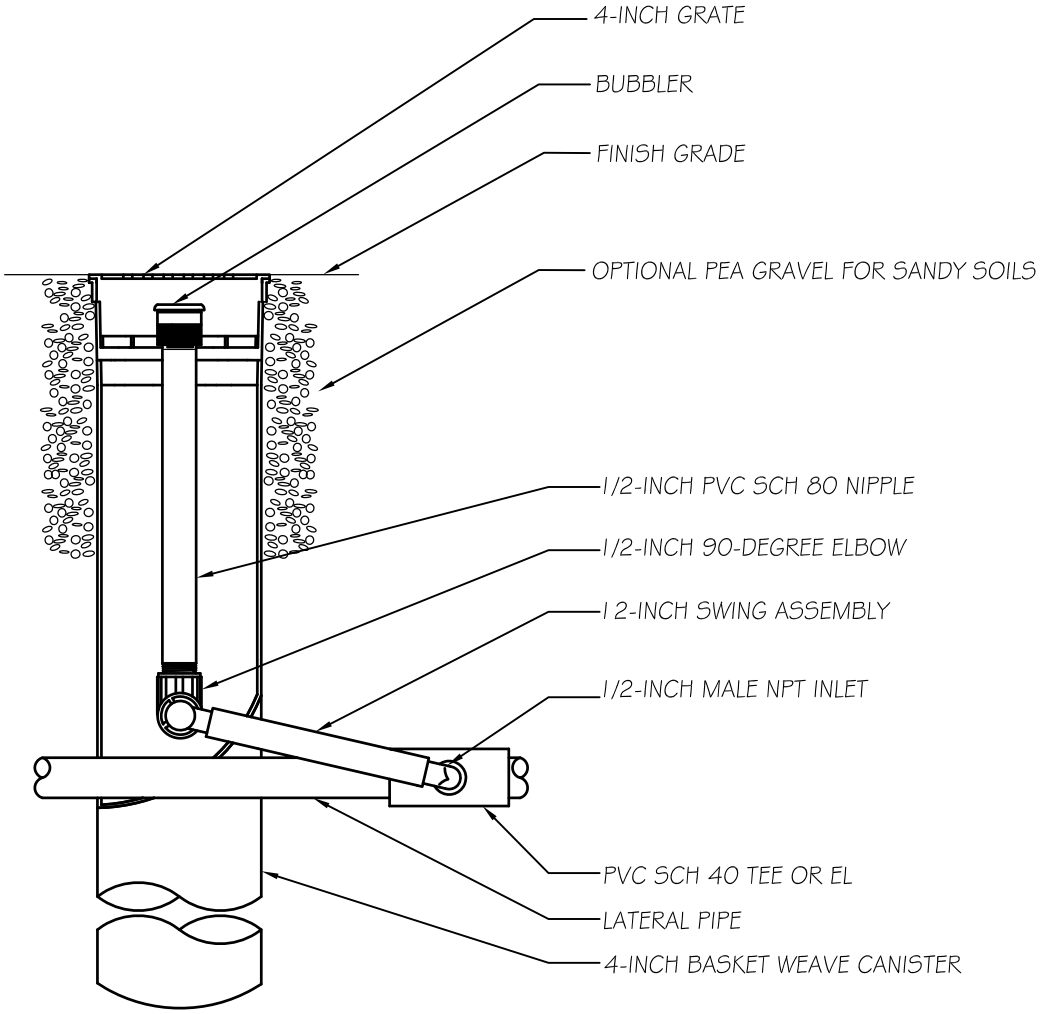

REVISIONS		CITY OF KINGSBURG	STD No.
FEB 09		TREE BUBBLER IN ROOT WATERING SYSTEM	L–10

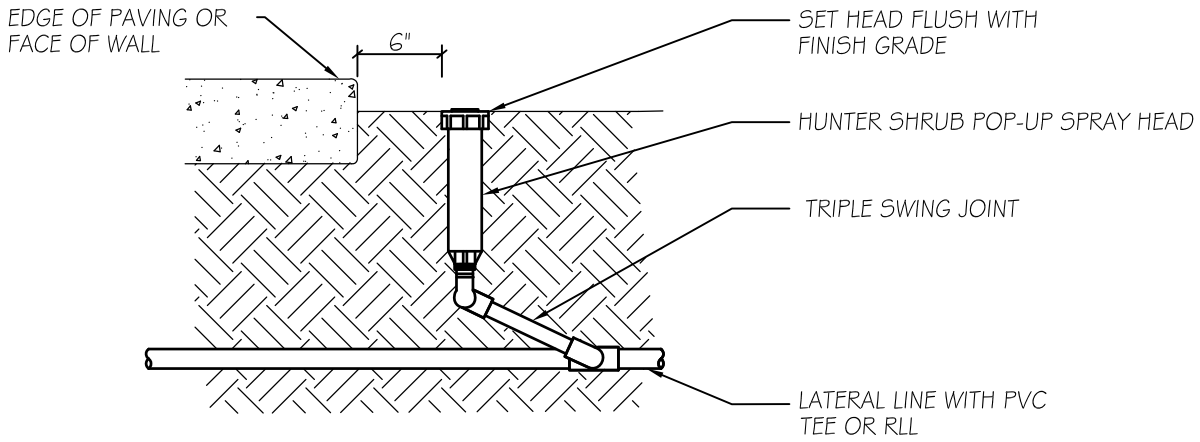

REVISIONS		CITY OF KINGSBURG	STD No.
FEB 09		POP UP SPRAY HEAD	L–11

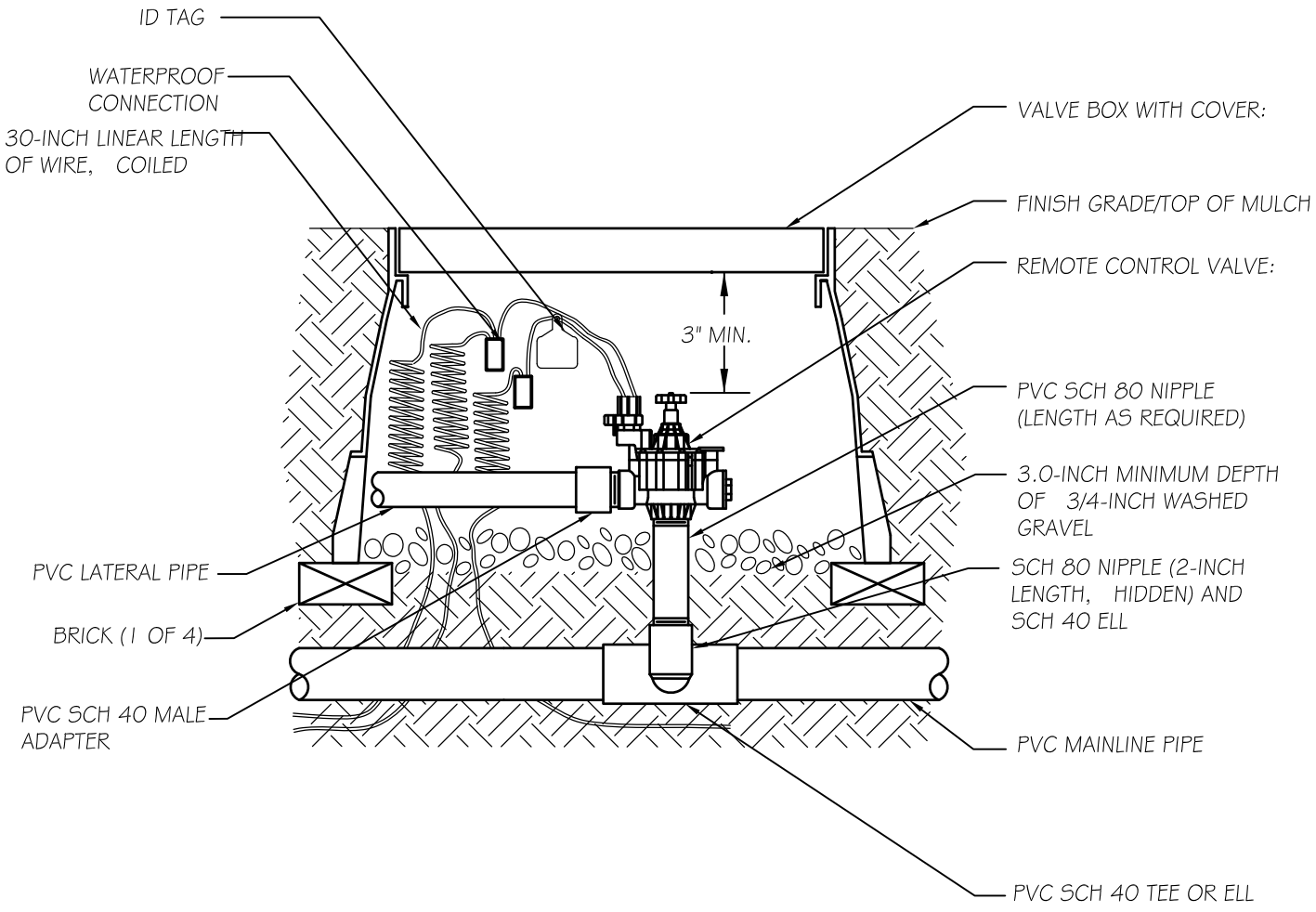

REVISIONS		CITY OF KINGSBURG	STD No.
FEB 09			
		REMOTE CONTROL VALVE–ANGLE	L–12

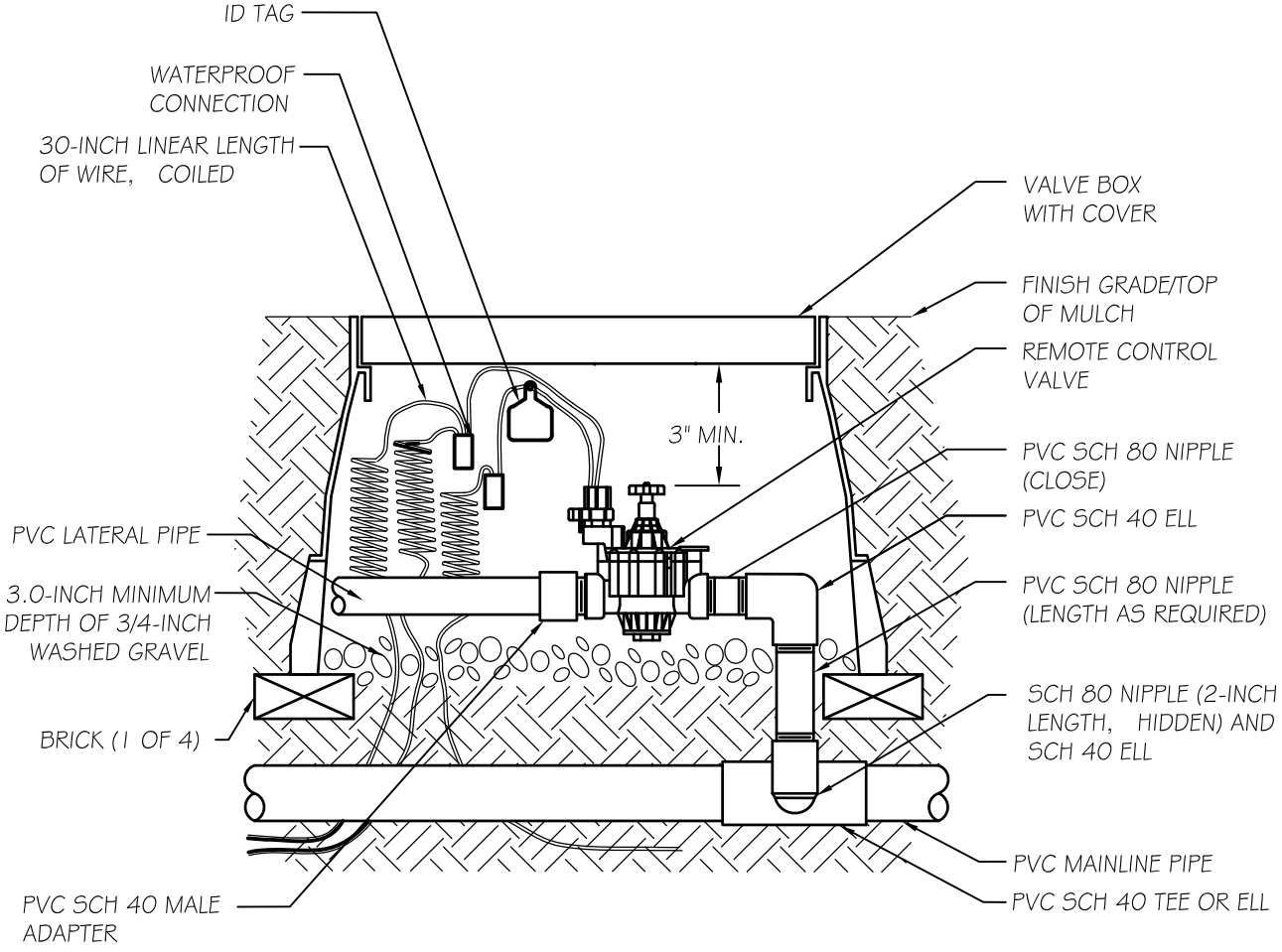

REVISIONS		CITY OF KINGSBURG	STD No.
FEB 09		REMOTE CONTROL VALVE–GLOBE	L–13

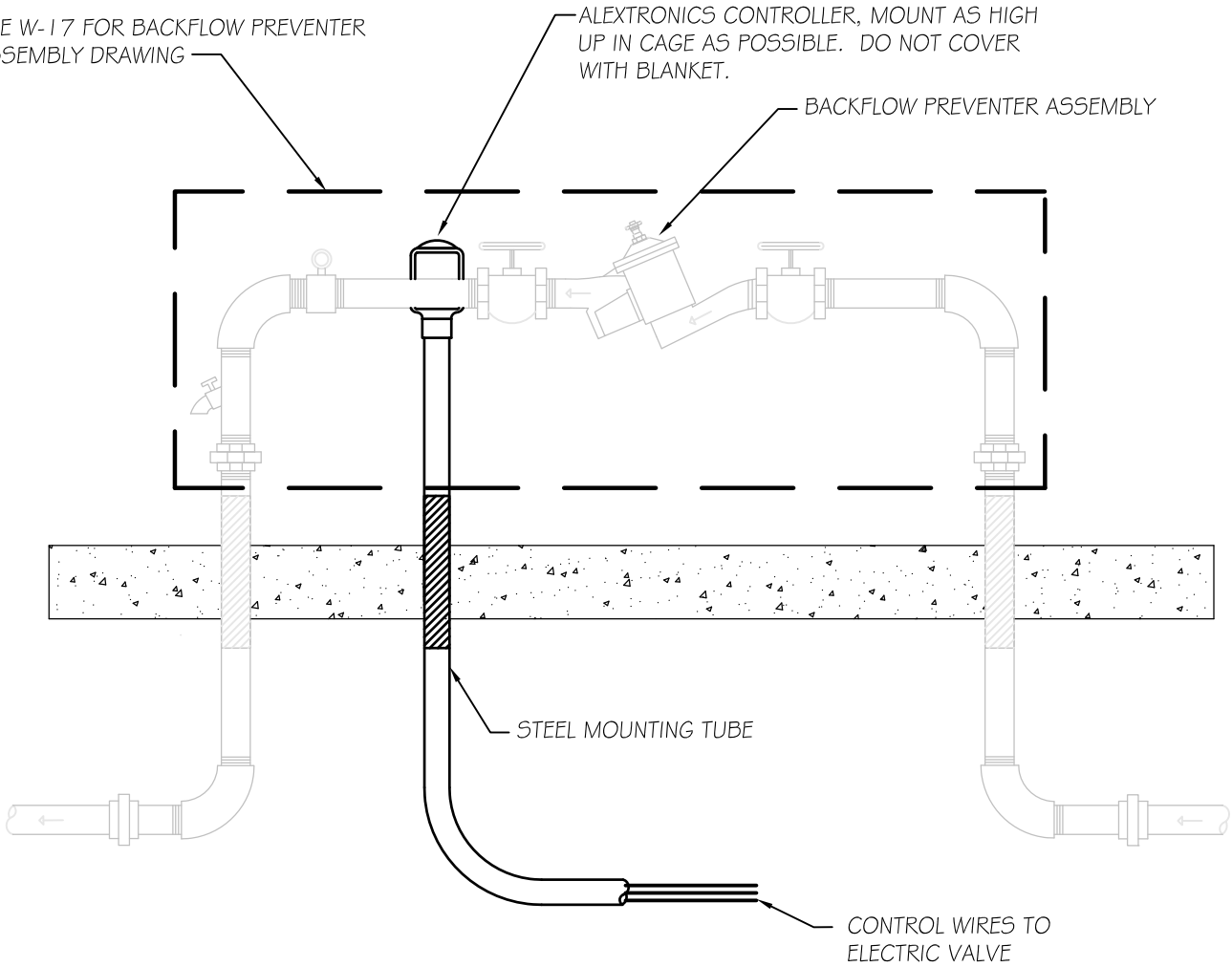

REVISIONS		CITY OF KINGSBURG	STD No.
FEB 09		SOLAR IRRIGATION CONTROLLER	L–14

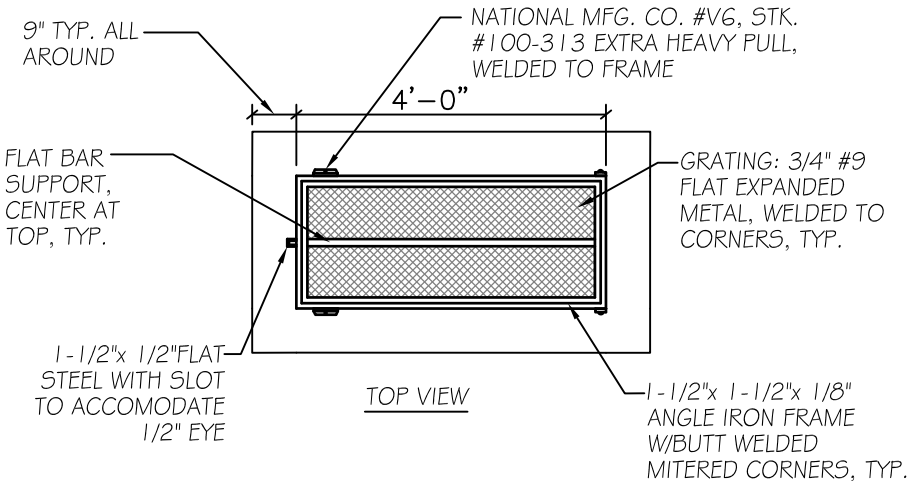

TOP VIEW

NOTES:

1. ALL EXPOSED PARTS SHALL BE SAND BLASTED SMOOTH AND POWDER COATED, FOREST GREEN.
2. ALL OUTSIDE WELDS SHALL BE GROUND SMOOTH.
3. HINGE FABRICATED FROM 1/2" S.S. BOLT, WASHERS & AIRCRAFT NUTS. BURR THREAD TO PREVENT REMOVAL.
4. METAL GRATING SHALL BE INSTALLED AND WELDED TO INSIDE OF ENCLOSURE. POWDER COATED, FOREST GREEN.
5. VACUUM BREAKER MANIFOLD NOT EXCEED 42" IN LENGTH IN ORDER FOR CAGE CLEARANCE.

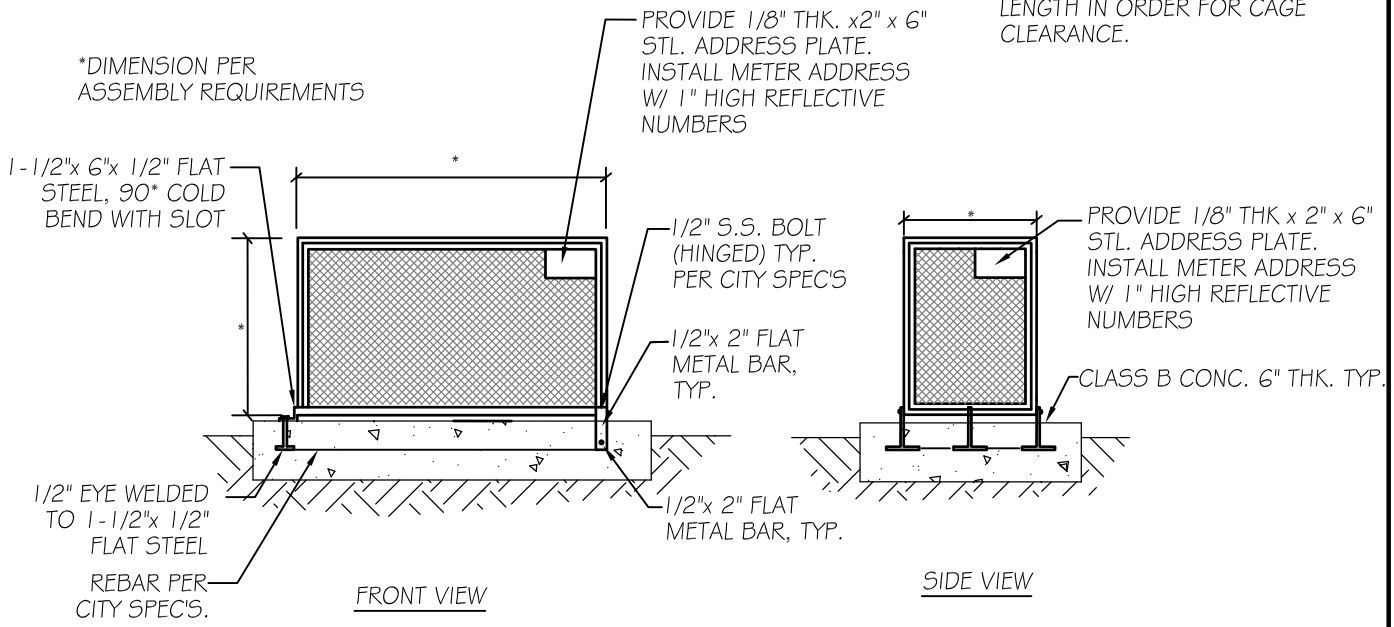

FRONT VIEW

SIDE VIEW

REVISIONS		CITY OF KINGSBURG	STD No.
FEB 09		BACKFLOW PREVENTER CAGE	L–15

MISCELLANEOUS

M-1 Six (6) Inch Masonry Wall
M-2 Four (4) Inch Masonry Wall
M-3 Control Survey Monument - A
M-4 Control Survey Monument - B
M-5 Trash Bin Enclosure - A
M-6 Trash Bin Enclosure - B
M-7 6-ft Chain Link Fence Footing
M-8 6-ft Chain Link Fence
M-9 6-ft Chain Link Gate Details
M-10 Trench Backfill and Surface Replacement

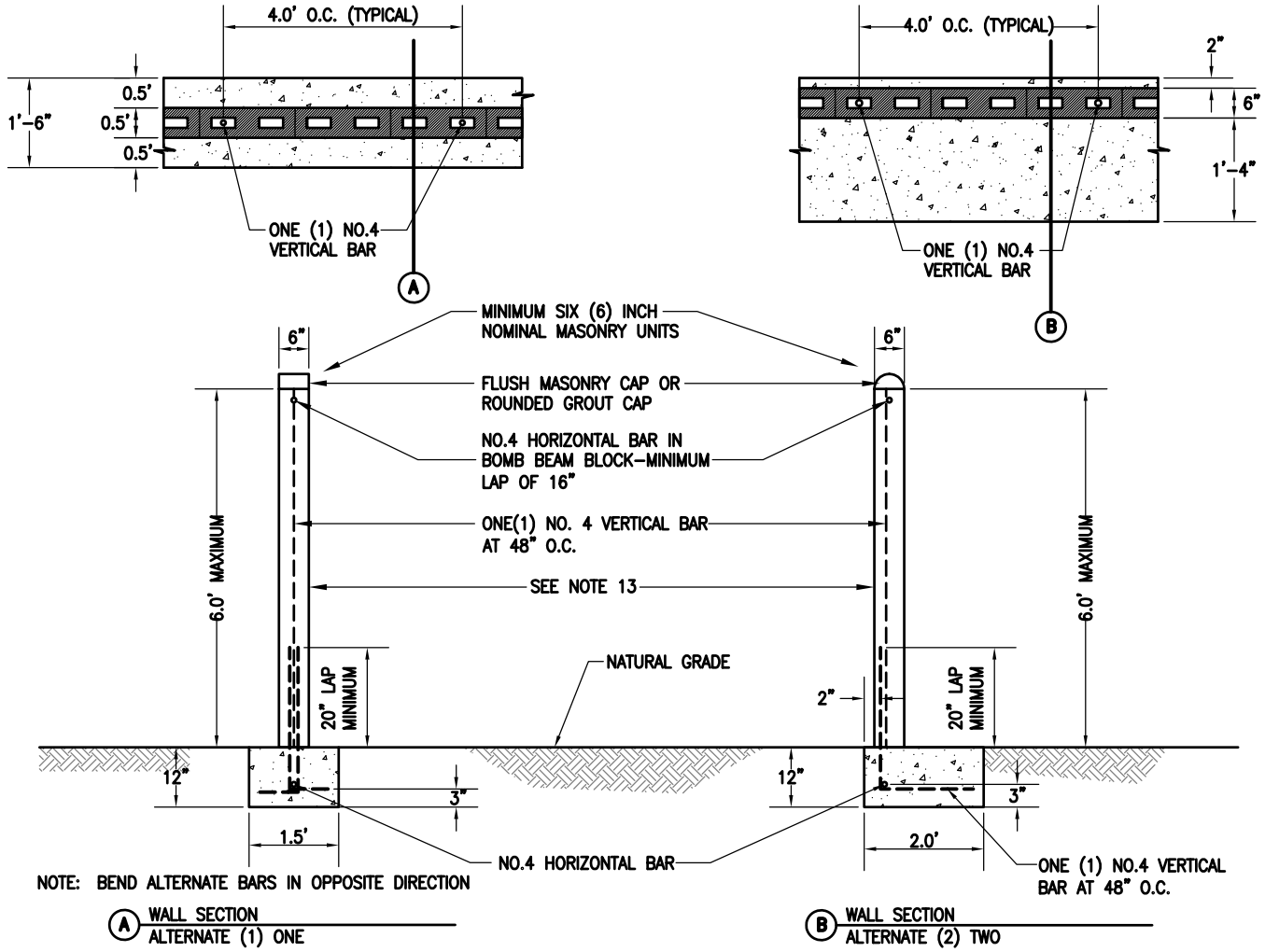

GENERAL NOTES AND SPECIFICATIONS

1. ALL CONSTRUCTION SHALL COMPLY WITH THE LATEST EDITION OF THE UNIFORM BUILDING CODE.
2. GROUT ALL CELLS CONTAINING REINFORCING STEEL
3. ALL MASONRY UNITS SHALL COMPLY WITH THE LATEST ADOPTED UNIFORM BUILDING CODE AND U.B.C. STANDARD 24-4 GRADE N.
4. ALL MASONRY WALLS SHALL BE INSPECTED BY THE CITY ENGINEER.
5. DEPTHS OF FOOTINGS ARE INTO NATURAL UNDISTURBED SOIL OR TESTED AND APPROVED COMPACTED FILL.
6. ALL MASONRY UNITS SHALL BE MINIMUM f'm = 1350 PSI
7. REINFORCING STEEL SHALL BE DEFORMED BARS MINIMUM GRADE 40
8. FOOTING CONCRETE SHALL BE A MINIMUM 2000 PSI AT 28 DAYS
9. THIS DESIGN SHALL NOT BE USED FOR RETAINING EARTH
10. MORTAR SHALL BE TYPE-S (MINIMUM 1800 PSI), ONE(1) PART CEMENT, TYPE I-ONE HALF($\frac{1}{2}$) PART LIME PUTTY OR HYDRATED LINE, FOUR AND ONE HALF (4-$\frac{1}{2}$) PARTS SAND (MAXIMUM)
11. GROUT SHALL BE MINIMUM 2000 PSI AT 28 DAYS, ONE (1) PART CEMENT-THREE (3) PARTS SAND - TWO (2) PARTS PEA GRAVEL
12. EARTH COLORED MATERIALS SHALL BE USED WHERE RESIDENTIAL AREAS ARE AFFECTED.
13. BLOCK TYPE TO BE APPROVED BY CITY ENGINEER PRIOR TO CONSTRCUTION. DECORATIVE OR FLUTED BLOCK MAY BE REQUIRED.
14. TREAT ENTIRE MASONRY BLOCK SURFACE WITH TAGPRUF™ ANTI-GRAFFITI COATING OR APPROVED EQUAL.

REVISIONS		CITY OF KINGSBURG	STD No.
OCT 10		SIX (6) INCH MASONRY WALL	M-1

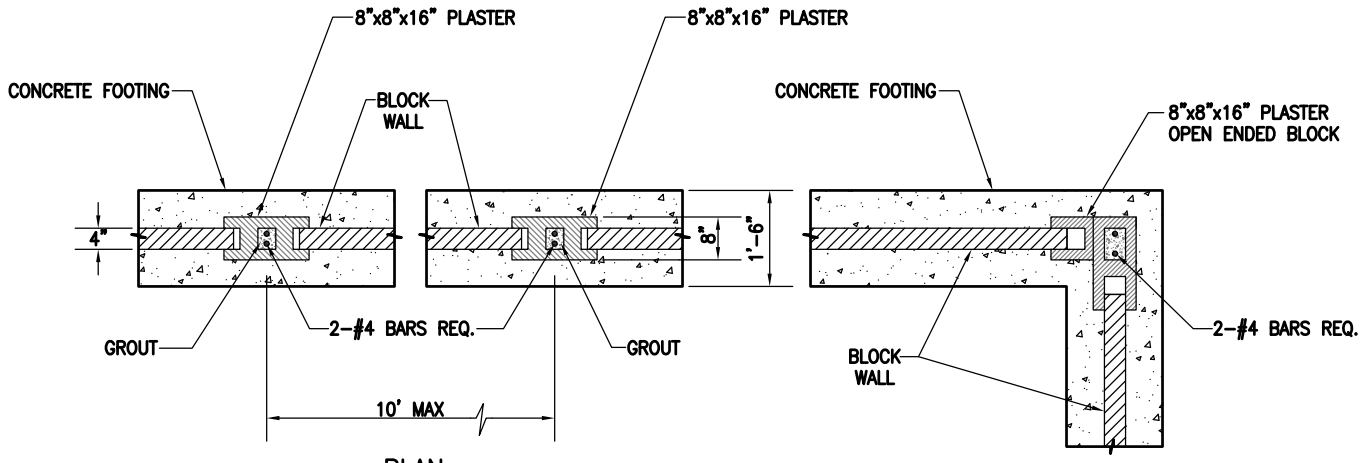

PLAN SECTION

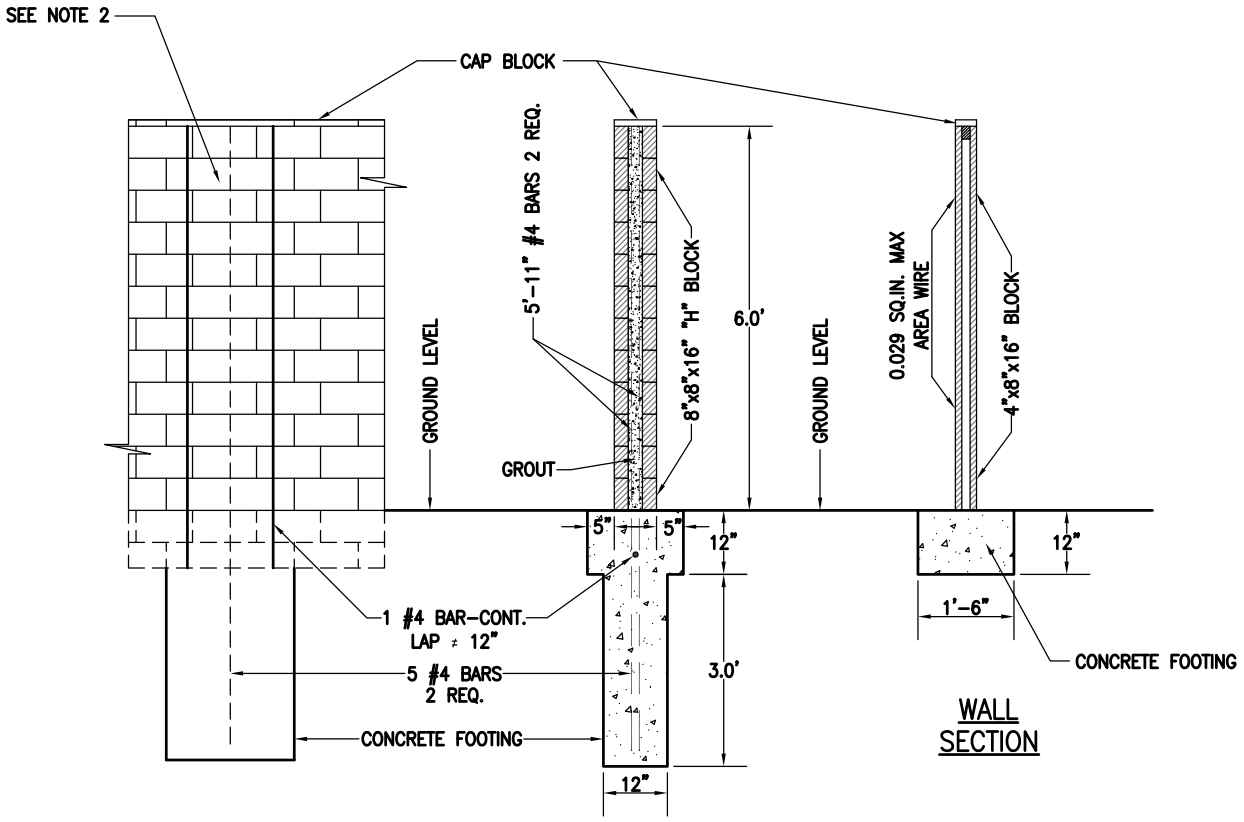

ELEVATION VIEW

PLASTER SECTION

WALL SECTION

NOTE:

1. SEE CITY STD. DWG. M-2 FOR GENERAL NOTES AND ADDITIONAL SPECIFICATIONS
2. BLOCK TYPE TO BE APPROVED BY CITY ENGINEER PRIOR TO CONSTRUCTION. DECORATIVE OR FLUTED BLOCK MAY BE REQUIRED.

REVISIONS		CITY OF KINGSBURG	STD No.
FEB 2009		FOUR (4) INCH MASONRY WALL	M-2

S:\2008\08-056\Kingsburg Standards Update\M-Miscellaneous\M-2.dwg 6-01-09 08:53 AM

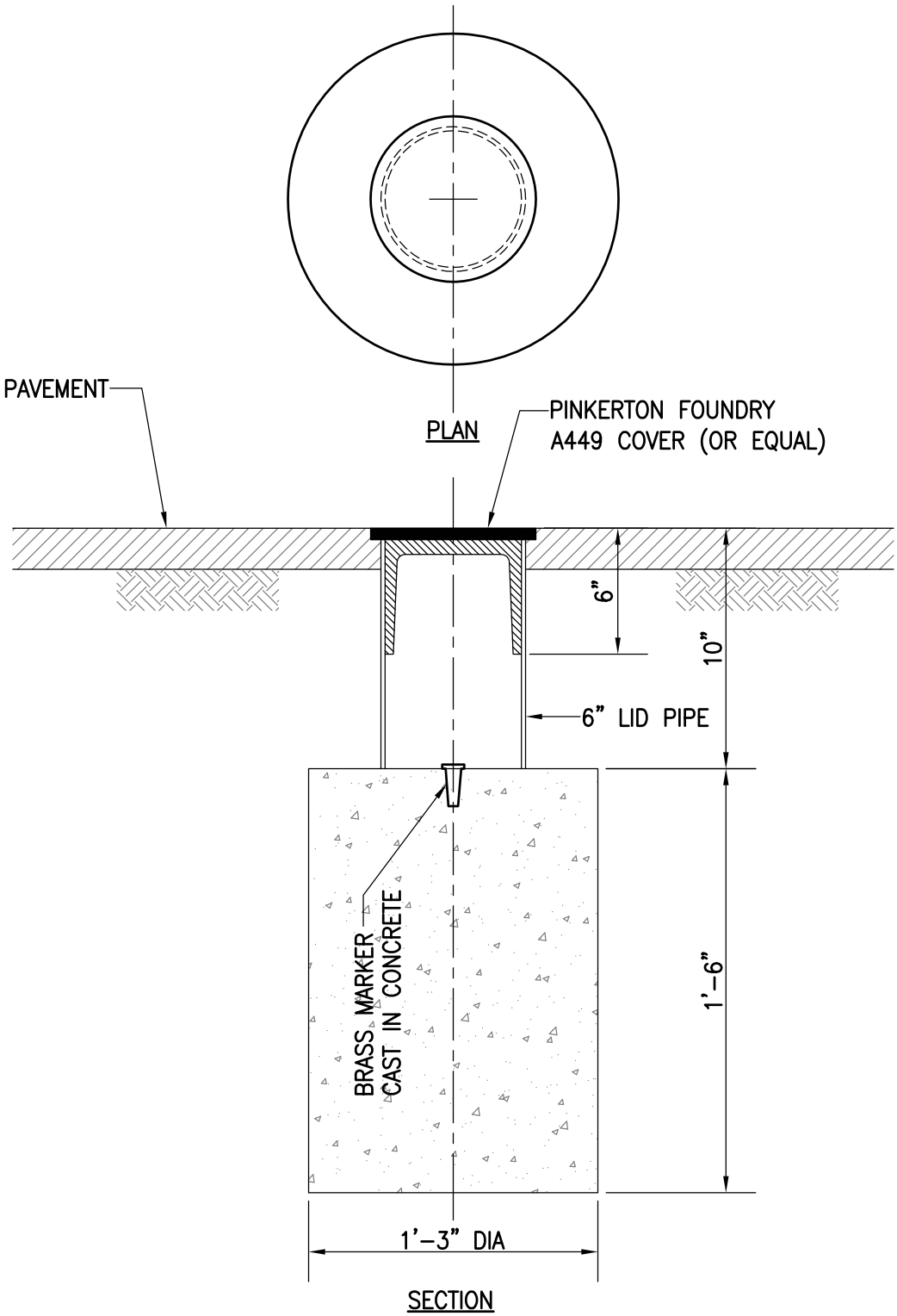

NOTE:

1. CONTROL SURVEY MONUMENT SHALL BE LOCATED AT ALL SECTION CORNERS.

REVISIONS		CITY OF KINGSBURG	STD No.
FEB 2009		CONTROL SURVEY MONUMENT – A	M–3

S:\2008\08-056\Kingsburg Standards Update\M-Miscellaneous\M-3.dwg 6-01-09 08:53 AM

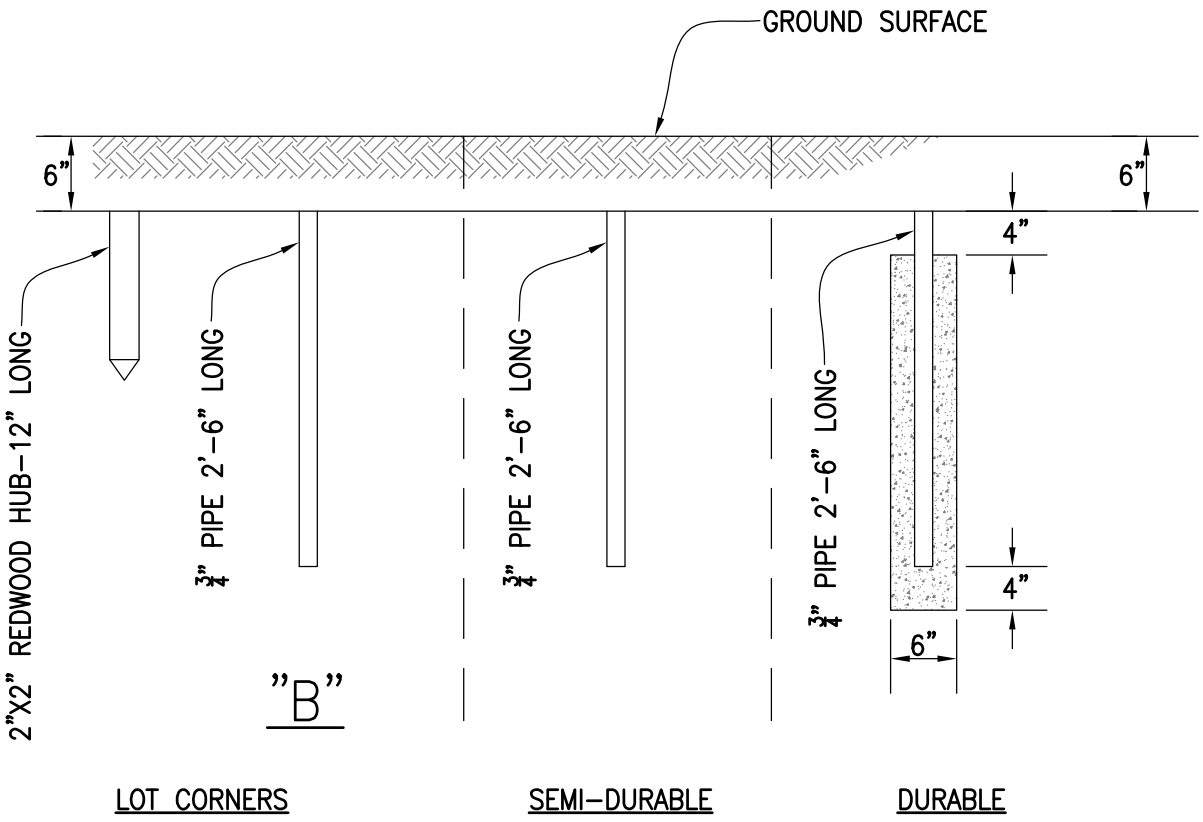

NOTES:

1. STATE LAW REQUIRES ENGINEER'S IDENTIFICATION NUMBER BE AFFIXED AT ALL PROPERTY CORNERS.
2. MONUMENT "A" OR "B" TO BE AT ALL PROPERTY CORNERS AND RETURNS.
3. DURABLE OR SEMI-DURABLE MONUMENTS TO BE AT ALL BLOCK CORNERS.
4. DURABLE MOUNUMENTS TO BE LOCATED AT INTERSECTION OF STREETS, ALL STREET INTERSECTIONS SHALL BE REFERENCED BY A MINIMUM OF THREE SWING – TIES.

REVISIONS		CITY OF KINGSBURG	STD No.
FEB 2009		CONTROL SURVEY MONUMENT – B	M-4

S:\2008\08-056\Kingsburg Standards Update\M-Miscellaneous\M-4.dwg 6-01-09 08:54 AM

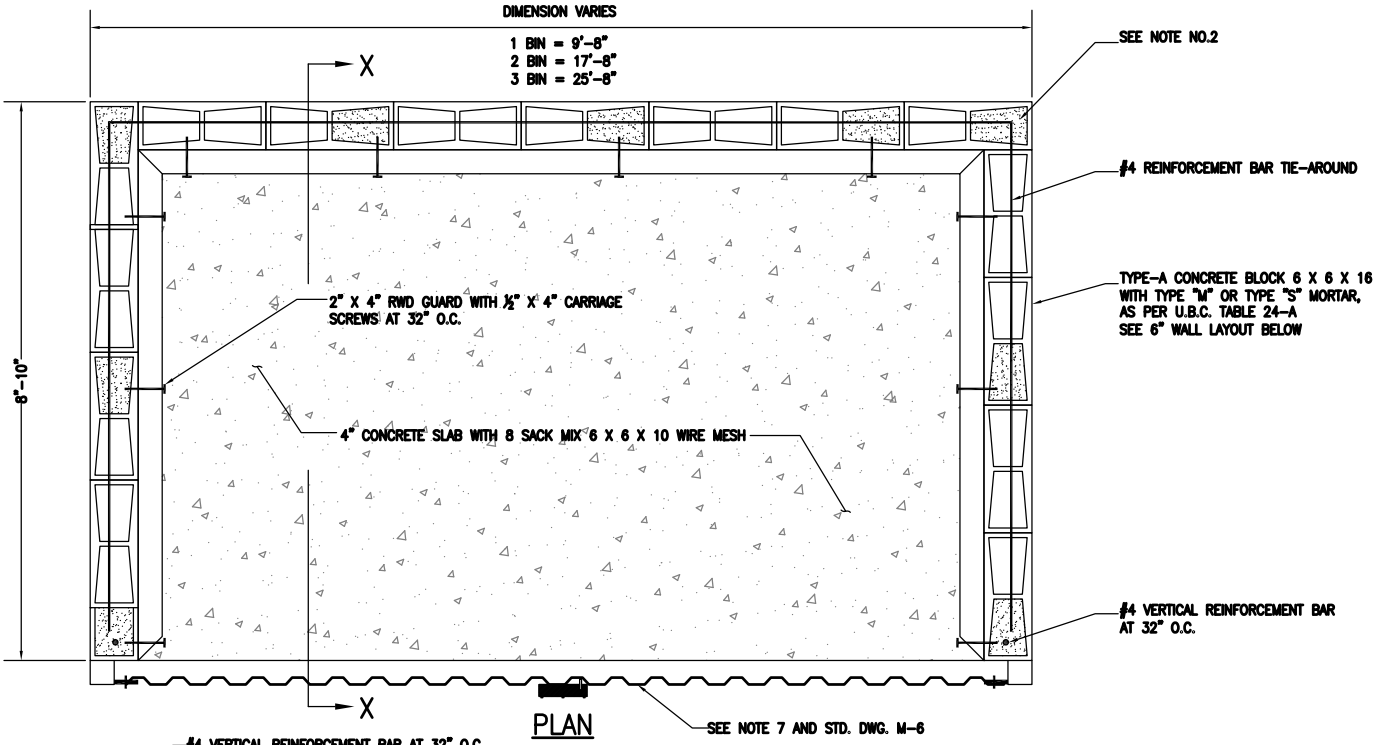

PLAN

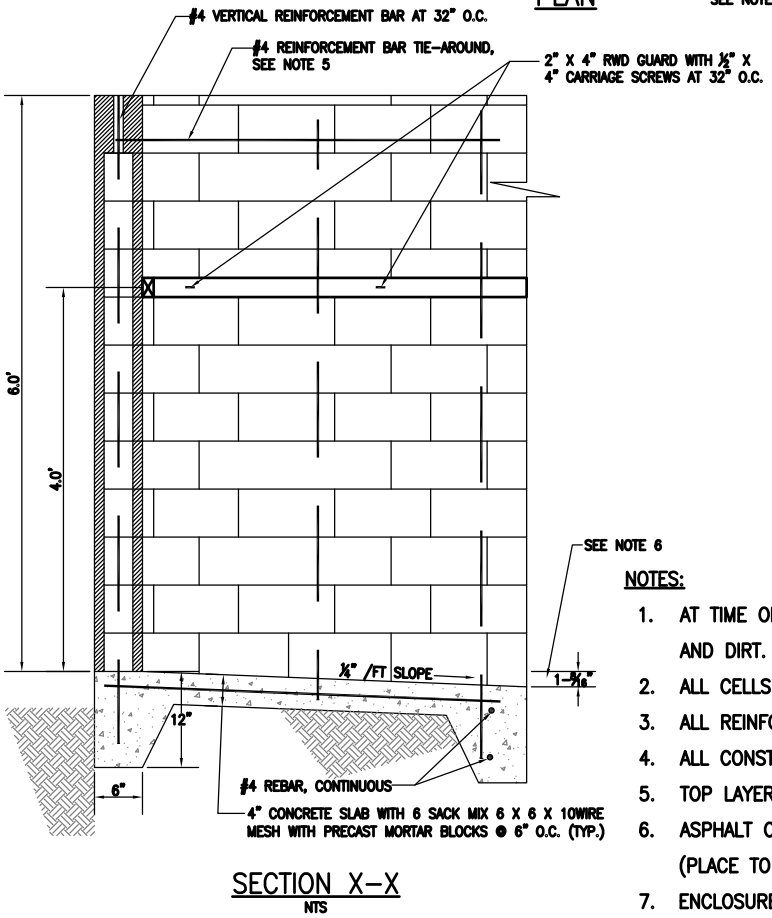

SECTION X-X
NTS

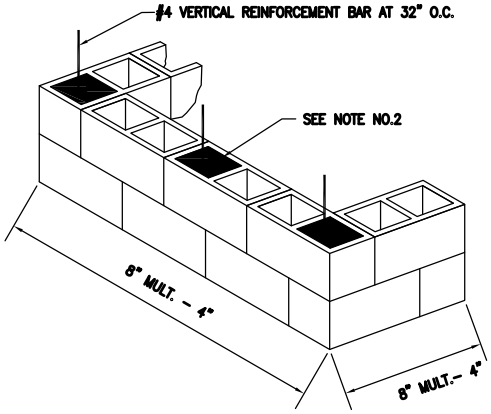

6" WALL LAYOUT

NOTES:

1. AT TIME OF LAYING, ALL MASONRY UNITS SHALL BE FREE OF EXCESSIVE DUST AND DIRT.
2. ALL CELLS WITH REINFORCEMENT SHALL BE FILLED WITH GROUT.
3. ALL REINFORCEMENT SHALL BE PLACED PRIOR TO GROUTING.
4. ALL CONSTRUCTION SHALL CONFORM TO U.B.C. SECTION 2415.
5. TOP LAYER OF CONCRETE BLOCK FULLBEDDED WITH MORTAR.
6. ASPHALT CONCRETE SURFACING ON APPROACH TO OPEN SIDE AS A MINIMUM. (PLACE TO TOP OF SLAB).
7. ENCLOSURE DOORS SHALL BE INSTALLED AS REQUIRED:

REVISIONS		CITY OF KINGSBURG	STD No.
FEB 2009			
		TRASH BIN ENCLOSURE – A	M-5

S:\2008\08-056\Kingsburg Standards Update\M-Miscellaneous\M-5.dwg 6-01-09 10:51 AM

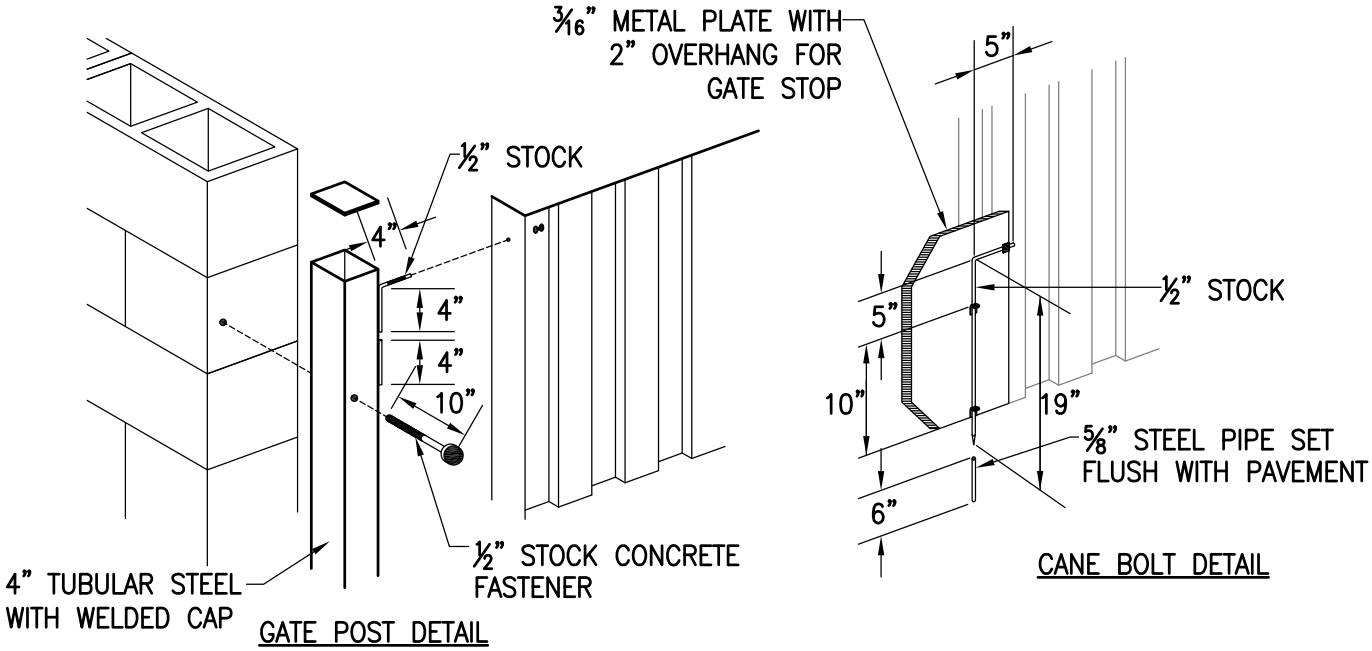

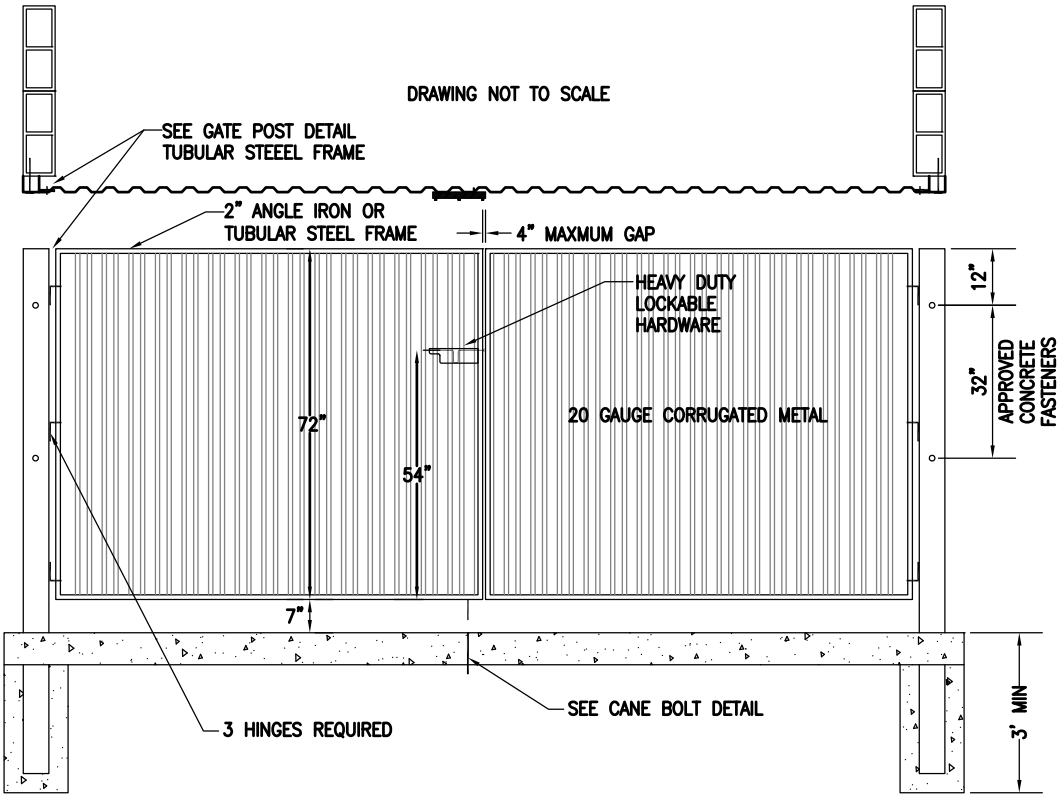

NOTES:

1. GATES TO BE PAINTED TO MATCH BUILDING ACCENT FEATURES

2. DESIGN, ENGINEERING AND CONSTRUCTION NOT SPECIFICALLY NOTED SHALL BE IN ACCORDANCE WITH ACCEPTED INDUSTRY STANDARDS & OF FIRST QUALITY.

REVISIONS		CITY OF KINGSBURG	STD No.
FEB 2009			
		TRASH BIN ENCLOSURE – B	M–6

S:\2008\08-056\Kingsburg Standards Update\M-Miscellaneous\M-6.dwg 6-01-09 10:52 AM

S:\2008\08-056\Kingsburg Standards Update\M-Miscallaneous\M-7.dwg 6-01-09 08:55 AM

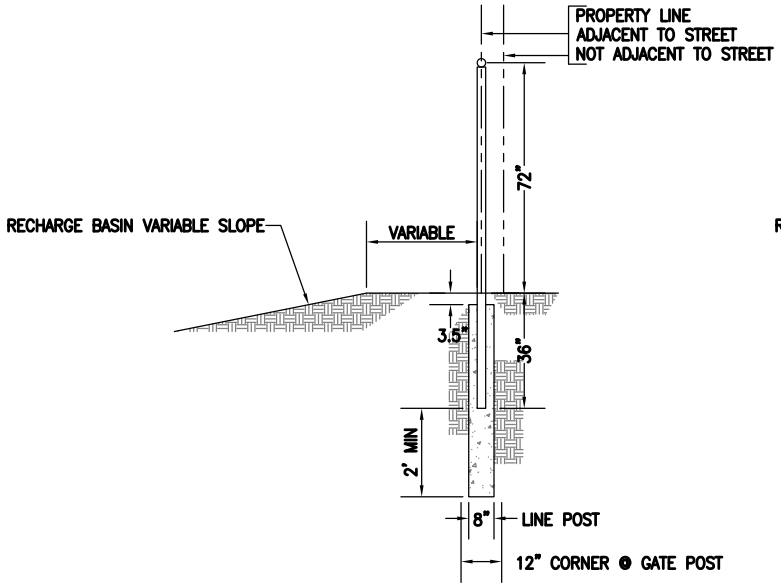

FOOTING

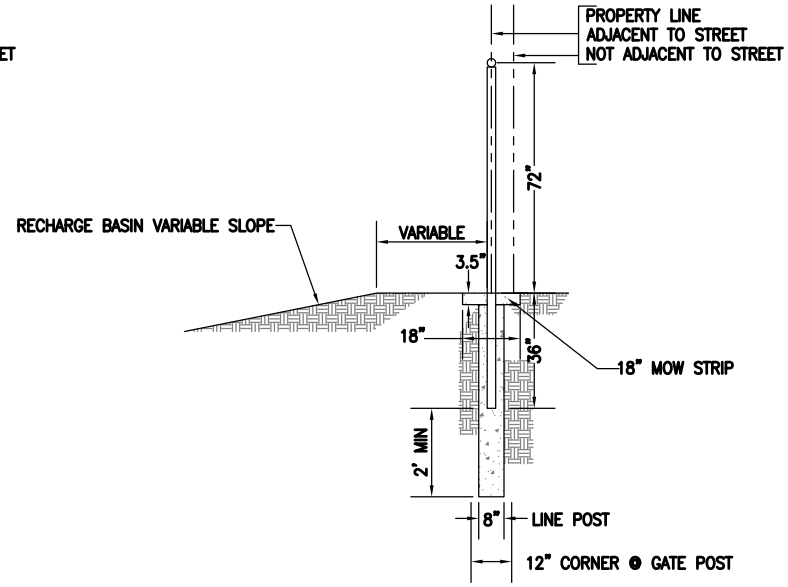

FOOTING & MOW STRIP

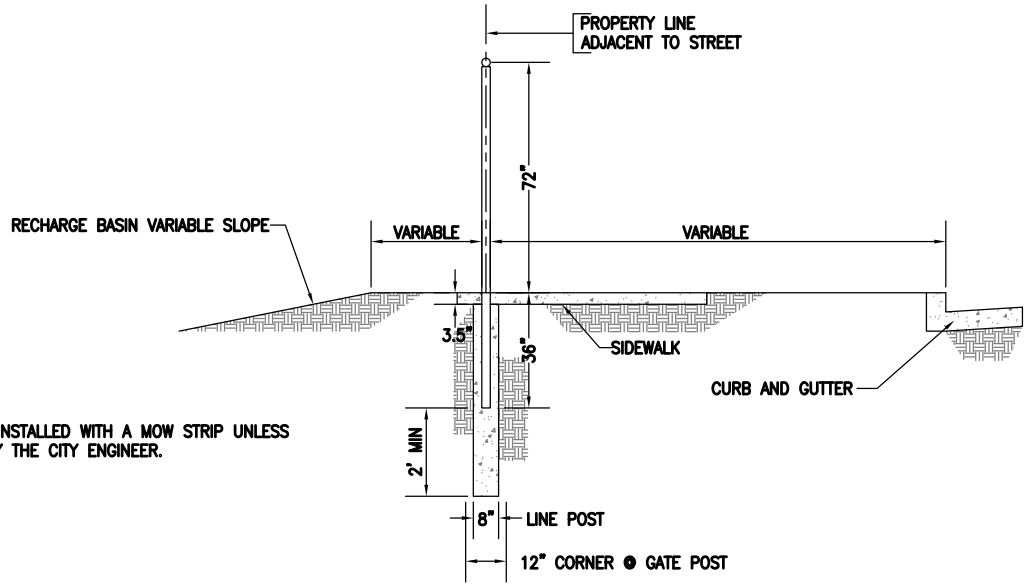

FOOTING & SIDEWALK

NOTE

1. ALL FENCING SHALL BE INSTALLED WITH A MOW STRIP UNLESS APPROVED OTHERWISE BY THE CITY ENGINEER.

REVISIONS

FEB 2009

CITY OF KINGSBURG

6' CHAIN LINK FENCE FOOTING

STD No. M-7

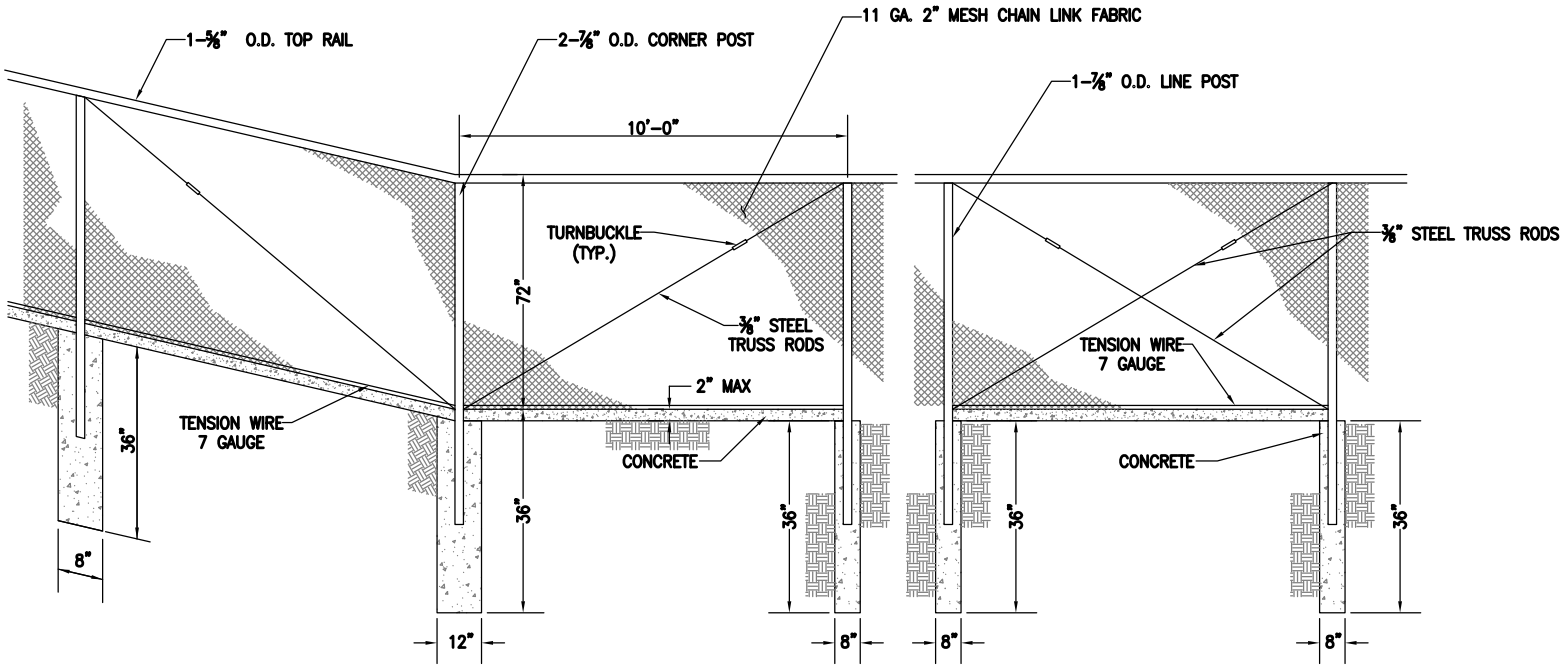

CORNER POST

LINE POST BRACING
AT 1,000' MAX INTERVALS

REVISIONS	
FEB 2009	

CITY OF KINGSBURG

6' CHAIN LINK FENCE

STD No. M-8

S:\2008\08-056\Kingsburg Standards Update\M-Miscallaneous\M-9.dwg 6-01-09 08:56 AM

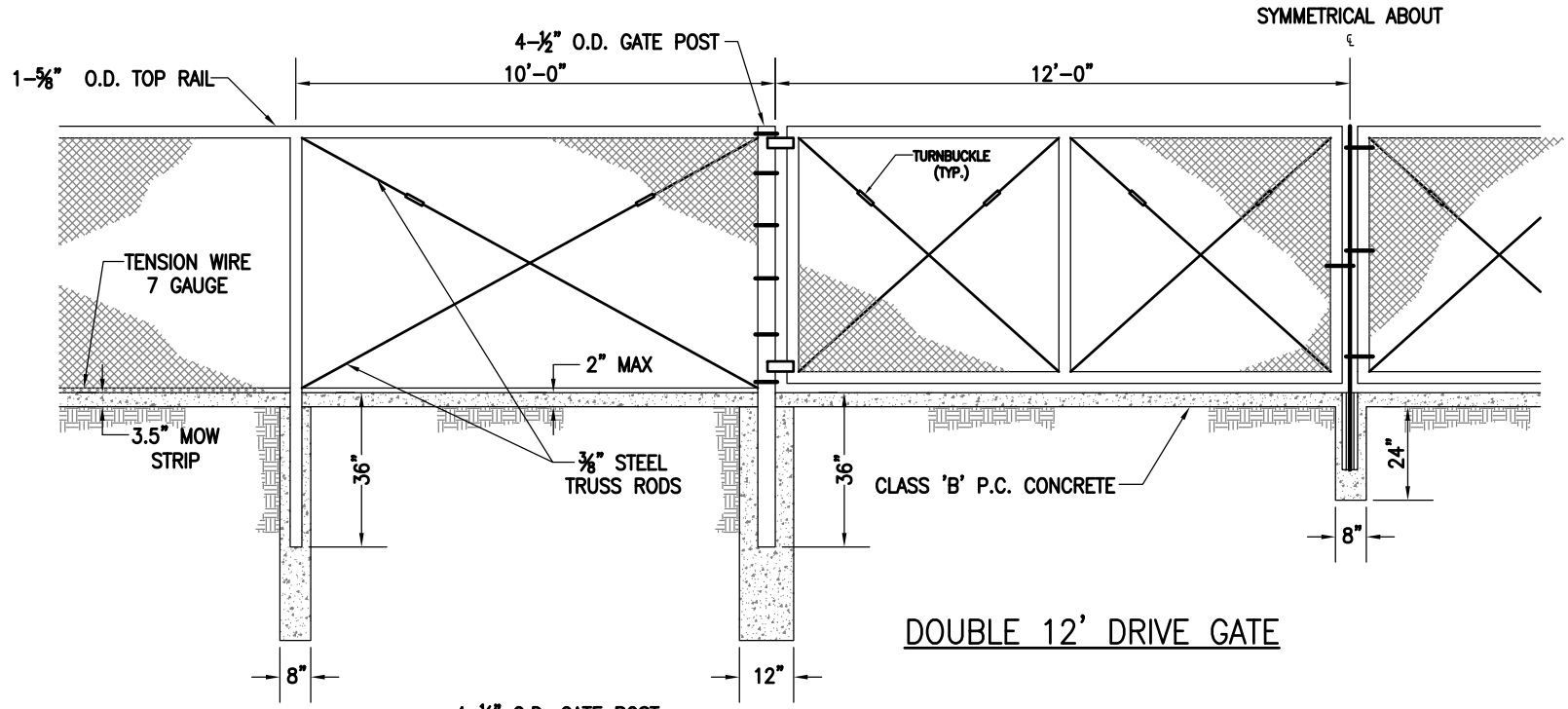

DOUBLE 12' DRIVE GATE

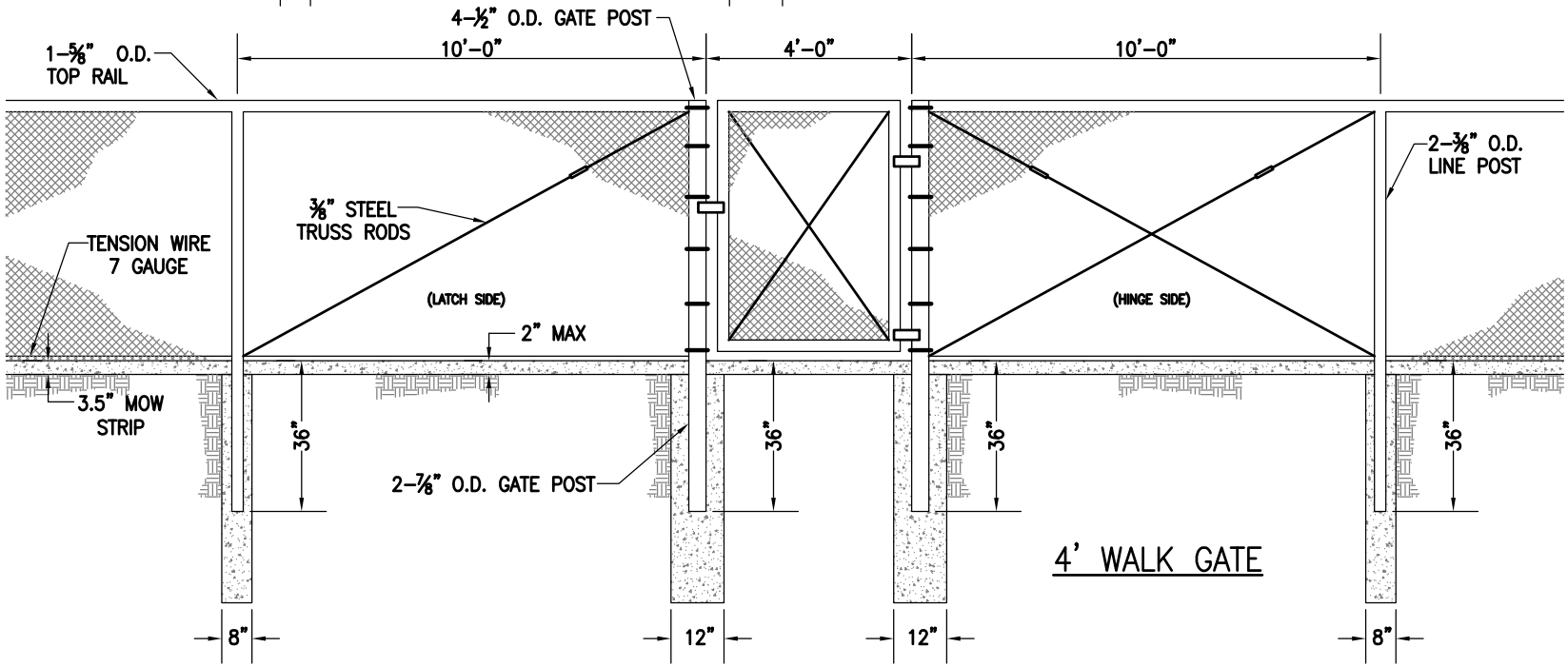

4' WALK GATE

REVISIONS	
FEB 2009	

CITY OF KINGSBURG

6' CHAIN LINK FENCE
GATE DETAILS

STD No.
M-9

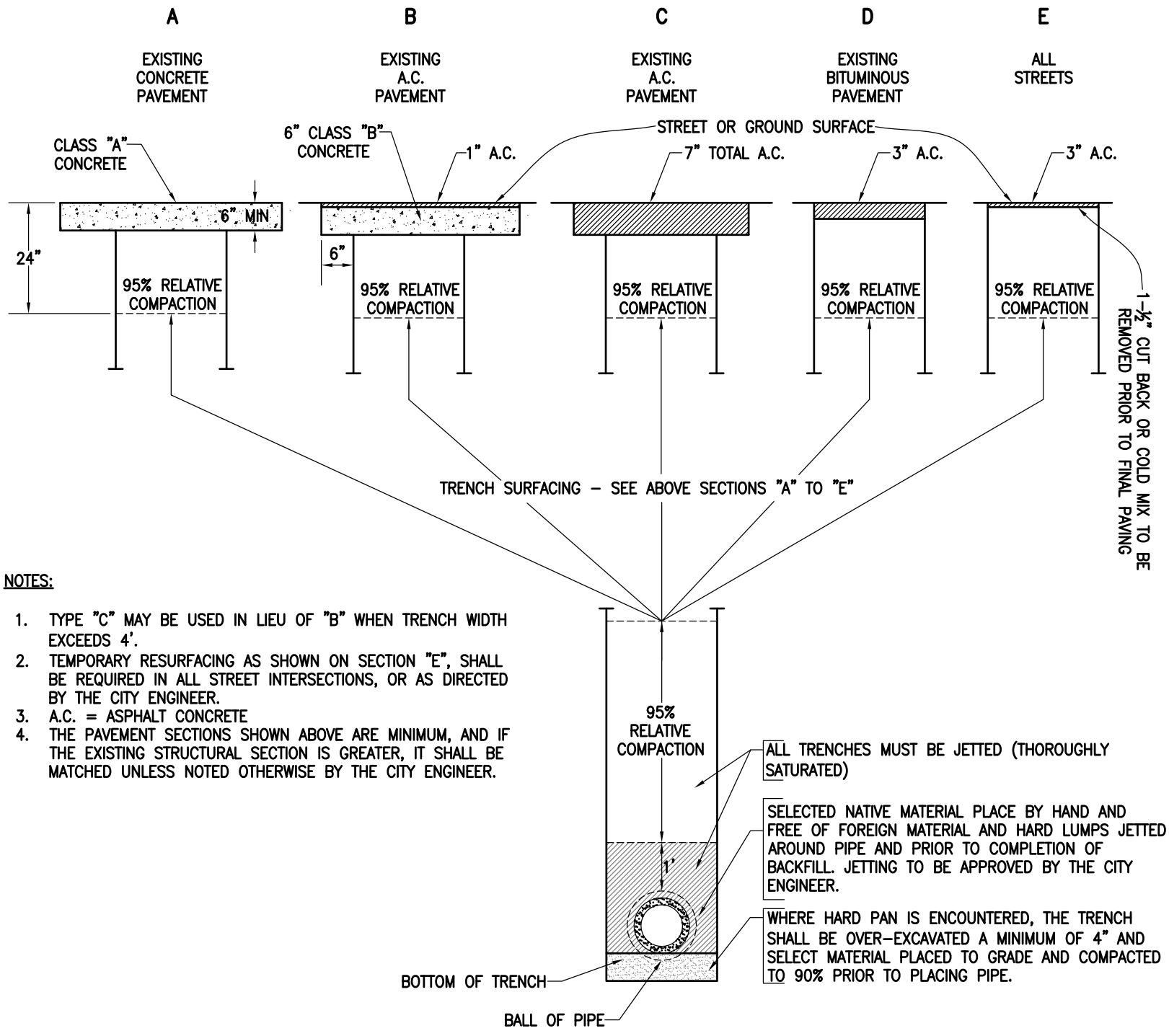

NOTES:

1. TYPE "C" MAY BE USED IN LIEU OF "B" WHEN TRENCH WIDTH EXCEEDS 4'.
2. TEMPORARY RESURFACING AS SHOWN ON SECTION "E", SHALL BE REQUIRED IN ALL STREET INTERSECTIONS, OR AS DIRECTED BY THE CITY ENGINEER.
3. A.C. = ASPHALT CONCRETE
4. THE PAVEMENT SECTIONS SHOWN ABOVE ARE MINIMUM, AND IF THE EXISTING STRUCTURAL SECTION IS GREATER, IT SHALL BE MATCHED UNLESS NOTED OTHERWISE BY THE CITY ENGINEER.

REVISIONS

FEB 2009

CITY OF KINGSBURG

TRENCH BACKFILL AND SURFACE REPLACEMENT

STD No. M-10

STREETS

ST-1 Arterial Street Section
ST-2 Minor Collector / Industrial Street
ST-3 Expressway Street Section
ST-4 Local Street Section
ST-5 Local Cul-de-sac Street Section
ST-6 Local Street Cul-de-sac
ST-7 Local Street Intersection Knuckle
ST-8 Walk-thru Cul-de-sac Section
ST-9 Median Detail
ST-10 Sidewalk Widening for Obstructions
ST-11 Driveway Access Designs
ST-12 Median Design
ST-13 Deceleration Lanes for Driveways
ST-14 84' Wide Arterial at Collector
ST-15 Minor Collector at a Collector / Local Road
ST-16 Local Road at Arterial
ST-17 Sign Post
ST-18 Street Name Sign
ST-19 Street Sign Location
ST-20 Dead End Street Barricade
ST-21 Street Width Transition Barricade
ST-22 Removable Bollard Detail
ST-23 Curb, Gutter, and Residential Sidewalk
ST-24 Curb, Gutter, and 10' Commercial Sidewalk
ST-25 Residential Drive Approach and Curb Return
ST-26 Commercial Drive Approach
ST-27 Alley Approach
ST-28 Alley Detail
ST-29 Pavement Design Chart
ST-30 Curb Ramp Notes and Details
ST-31 Detectable Warning Service
ST-32 Clear Vision Triangle Area
ST-33 Curb Ramp Case A
ST-34 Curb Ramp Case B
ST-35 Curb Ramp Case C
ST-36 Curb Ramp Case D
ST-37 Curb Ramp Case E
ST-38 Curb Ramp Case F
ST-39 Curb Ramp Case G
ST-40 Curb Ramp Case H
ST-41 Curb Ramp Case I
ST-42 Curb Ramp Case J
ST-43 Curb Ramp Case K
ST-44 Curb Ramp Case L
ST-45 Concrete Drive Way Cut-In Detail
ST-46 Valley Gutter
ST-47 Typical Finished Lot Grading

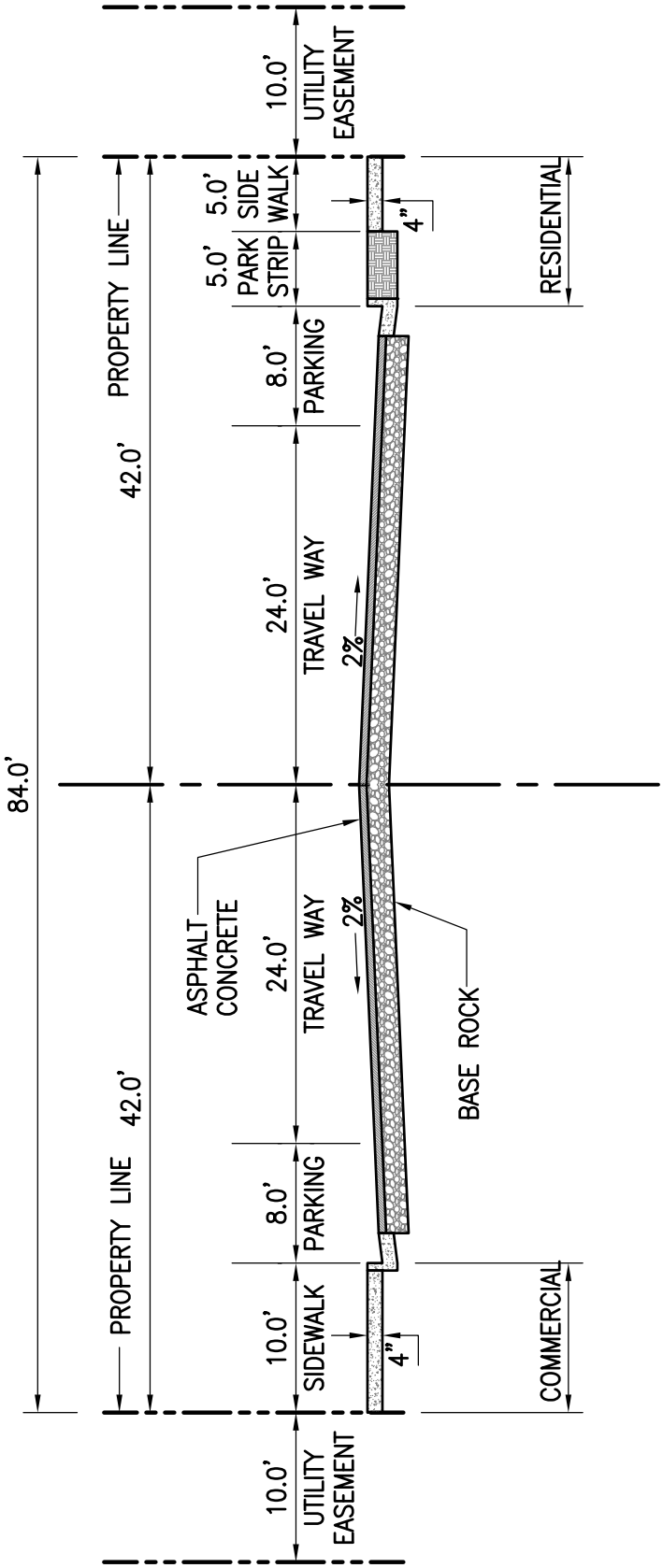

NOTE:

1. LANDSCAPING AND IRRIGATION SHALL BE AS APPROVED BY THE CITY ENGINEER.

REVISIONS		CITY OF KINGSBURG	STD No.
FEB 09		ARTERIAL STREET SECTION	ST–1

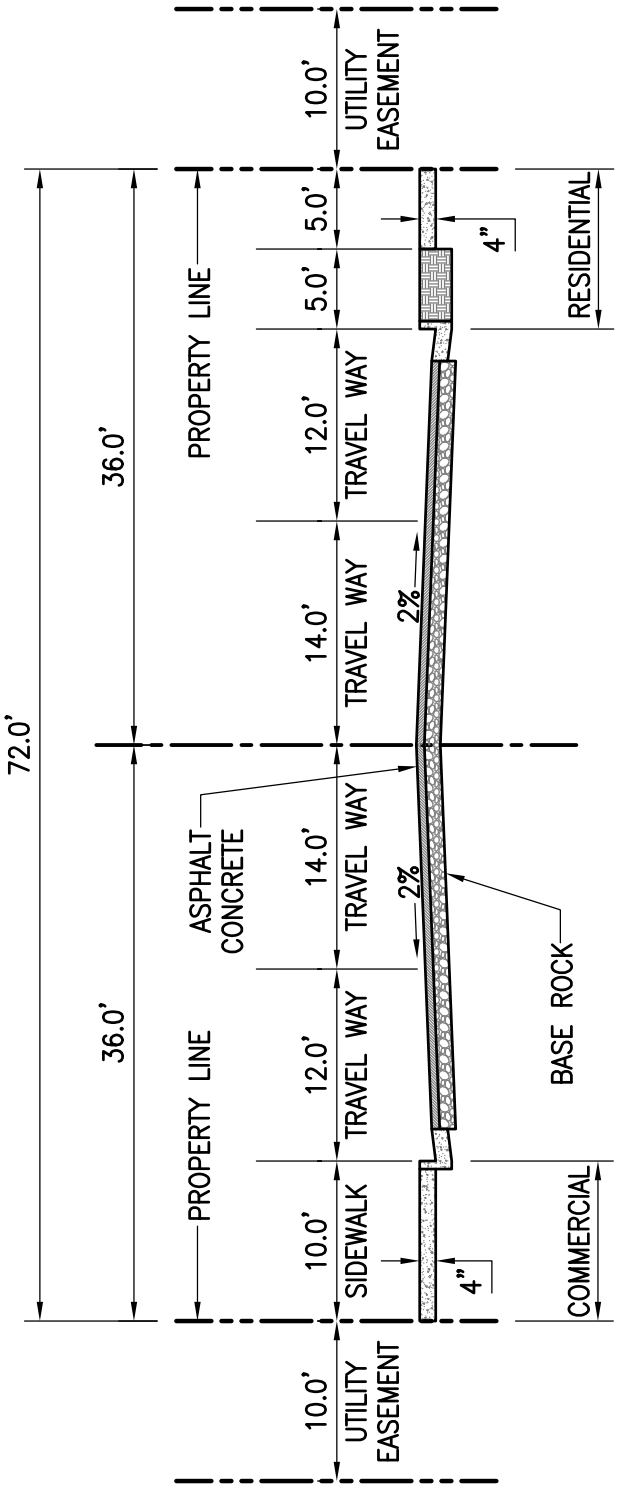

NOTE:

1. LANDSCAPING AND IRRIGATION SHALL BE AS APPROVED BY THE CITY ENGINEER.

REVISIONS		CITY OF KINGSBURG	STD No.
FEB 09		MINOR COLLECTOR/ INDUSTRIAL STREET SECTION	ST–2

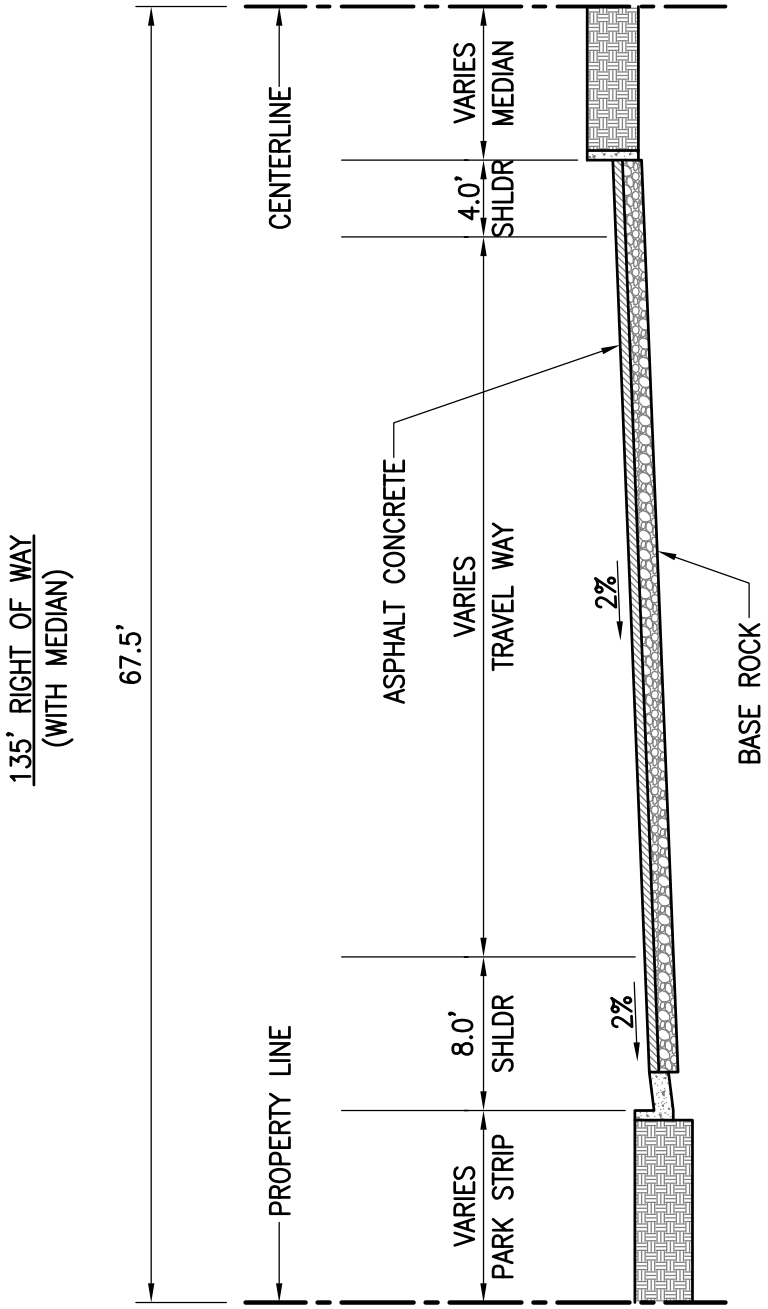

NOTE:

1. LANDSCAPING AND IRRIGATION SHALL BE AS APPROVED BY THE CITY ENGINEER.

REVISIONS		CITY OF KINGSBURG	STD No.
FEB 09		EXPRESSWAY STREET SECTION	ST-3

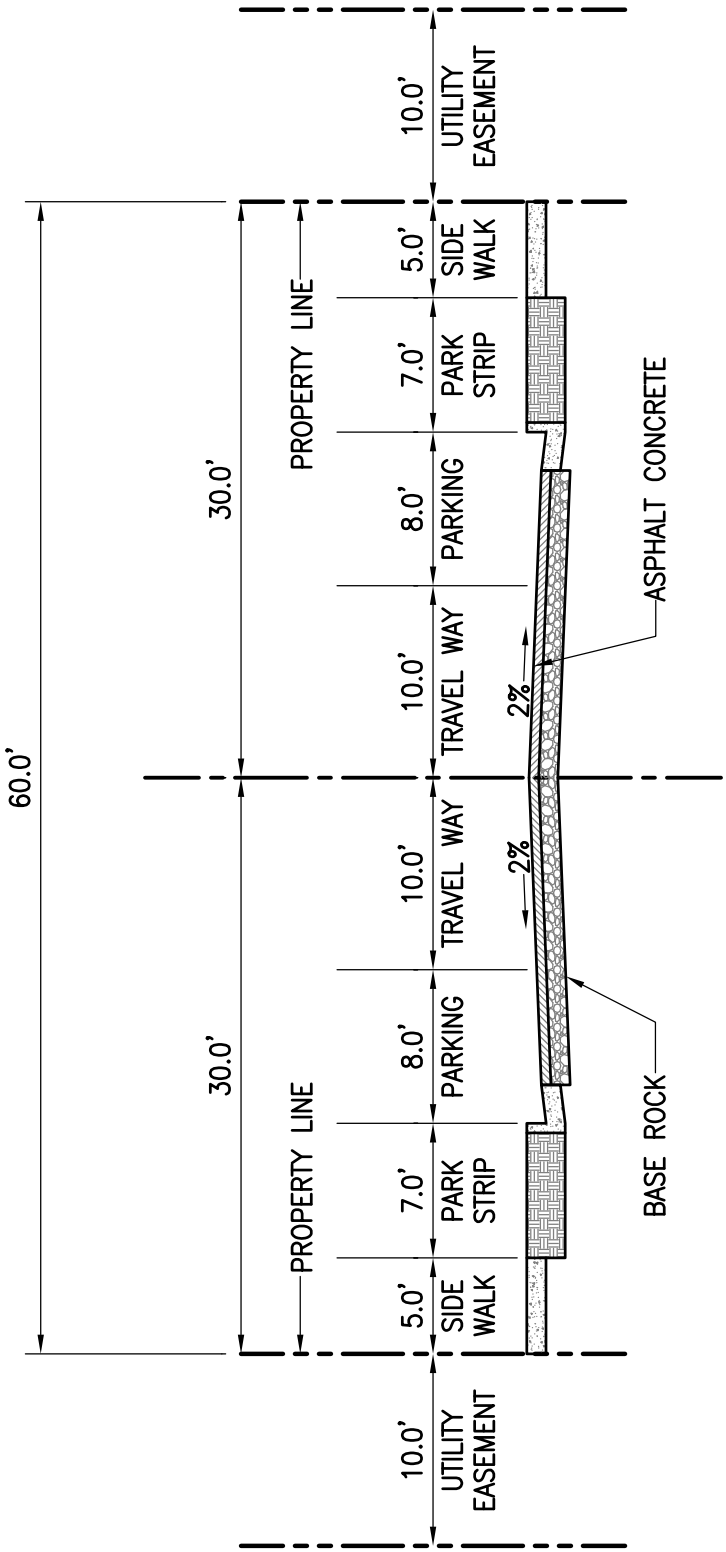

NOTE:

1. LANDSCAPING AND IRRIGATION SHALL BE AS APPROVED BY THE CITY ENGINEER.

REVISIONS		CITY OF KINGSBURG	STD No.
FEB 09		LOCAL STREET SECTION	ST–4

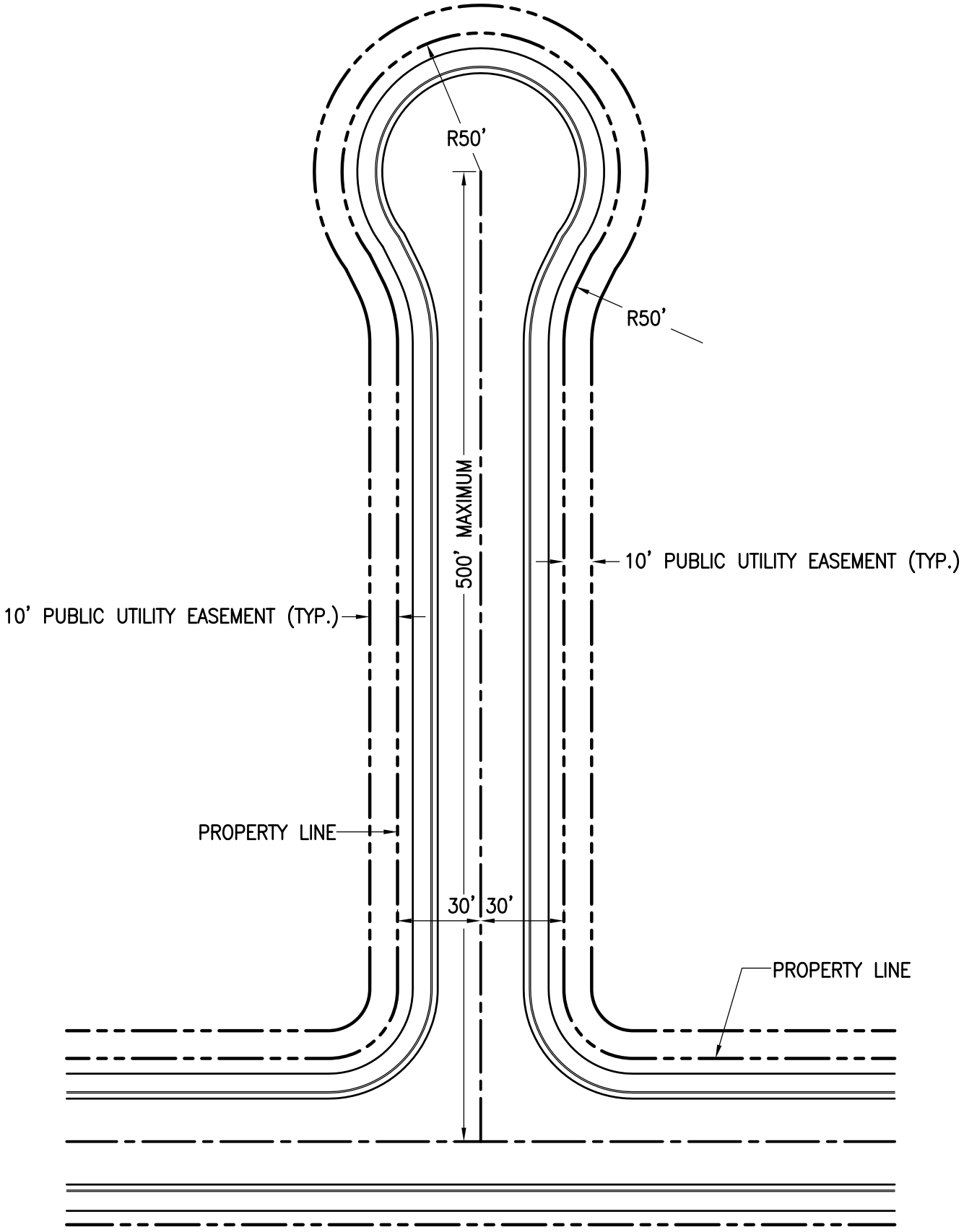

REVISIONS		CITY OF KINGSBURG	STD No.
FEB 09		LOCAL CUL-DE-SAC STREET SECTION	ST-5

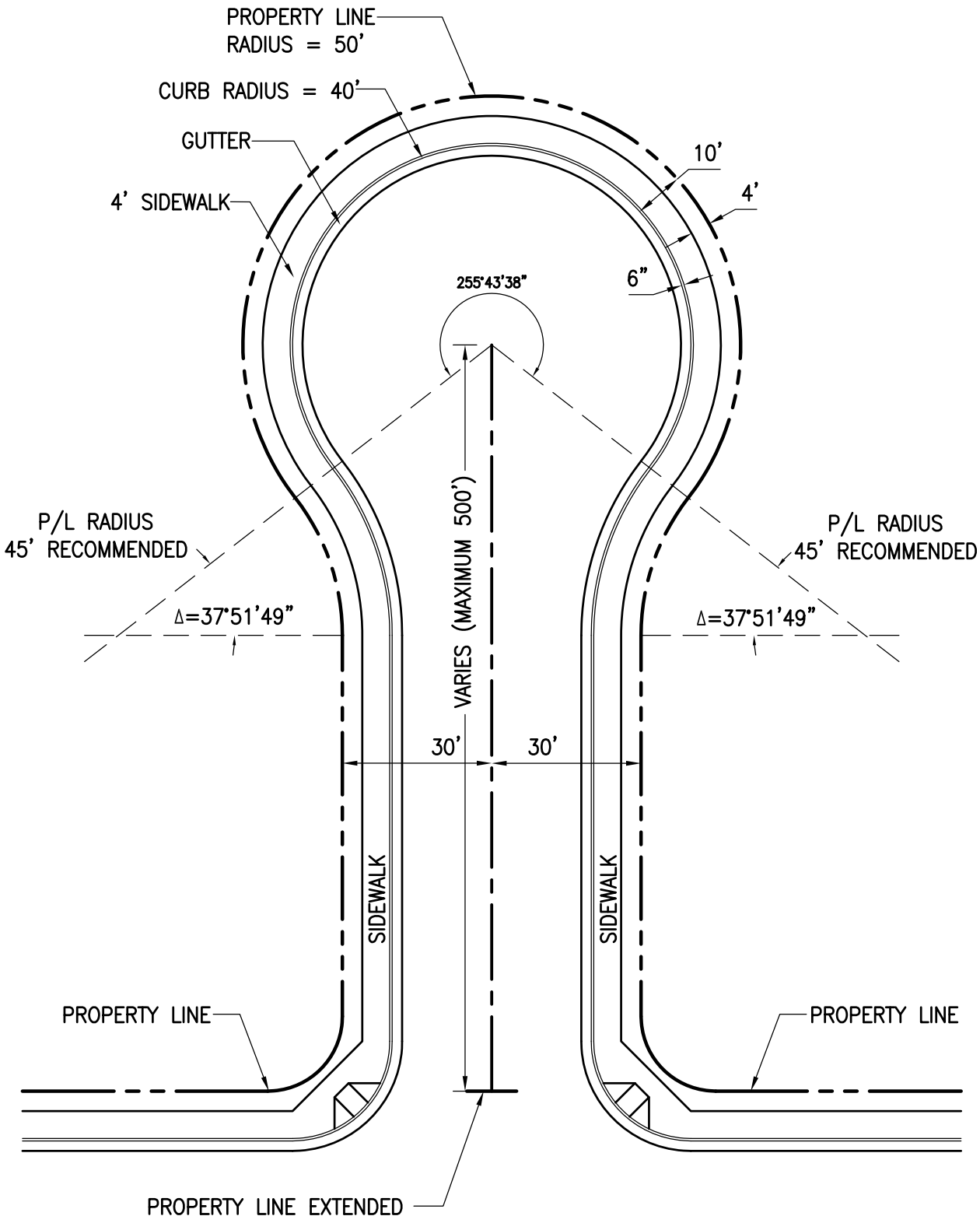

REVISIONS		CITY OF KINGSBURG	STD No.
FEB 09		LOCAL STREET CUL-DE-SAC	ST-6

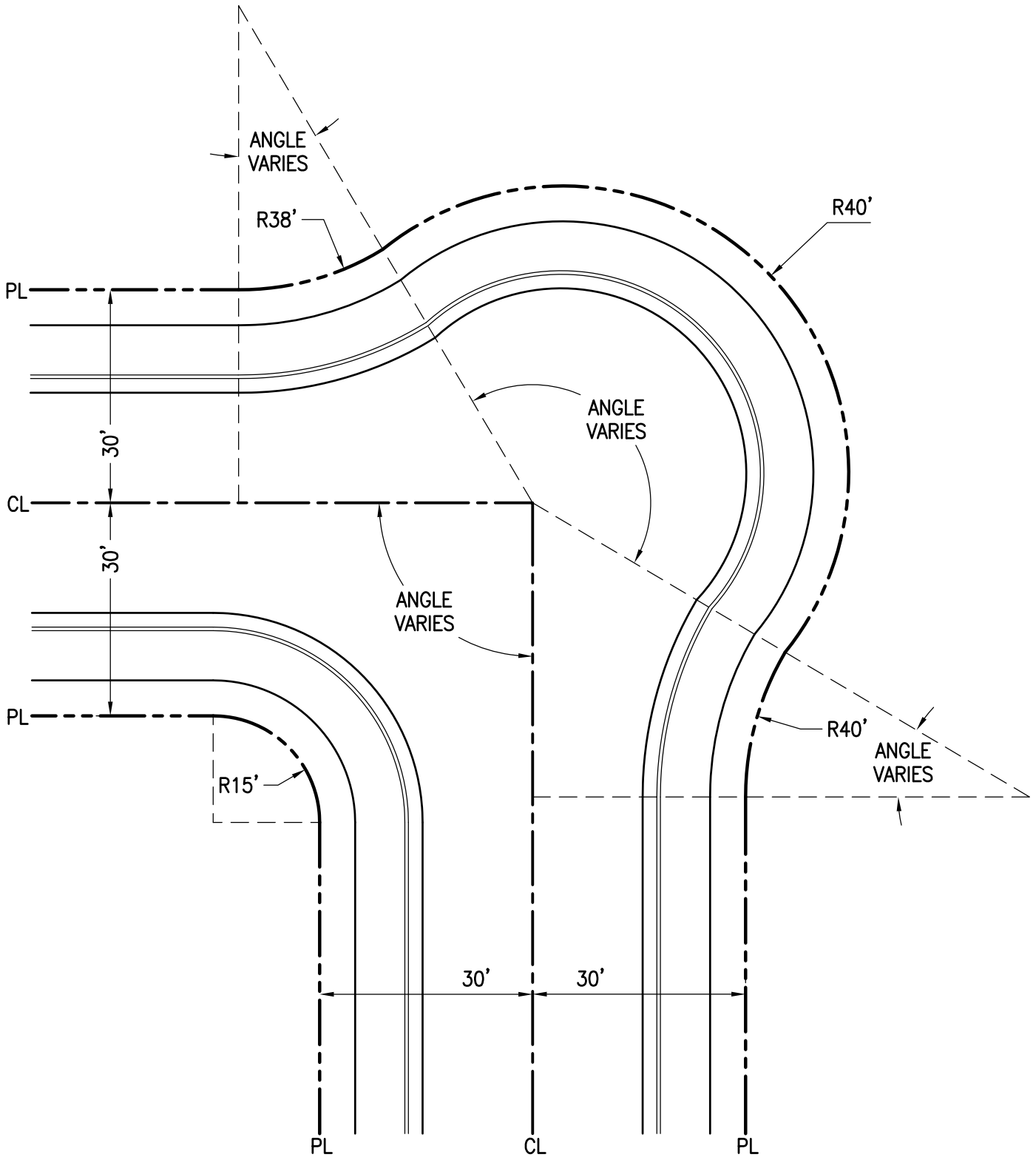

REVISIONS		CITY OF KINGSBURG	STD No.
FEB 09		LOCAL STREET INTERSECTION KNUCKLE	ST–7

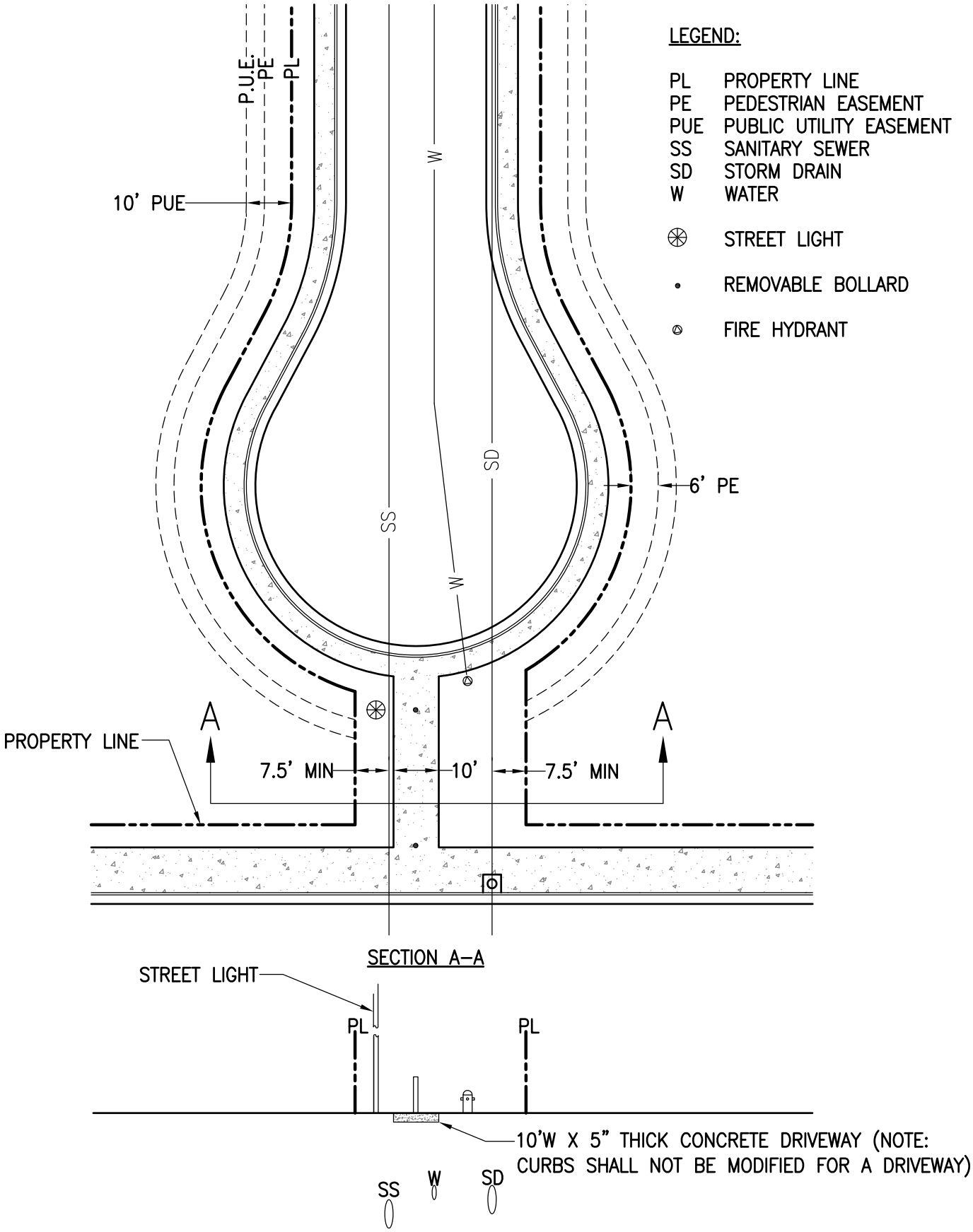

REVISIONS		CITY OF KINGSBURG	STD No.
FEB 09		WALK–THRU CUL–DE–SAC SECTION	ST–8

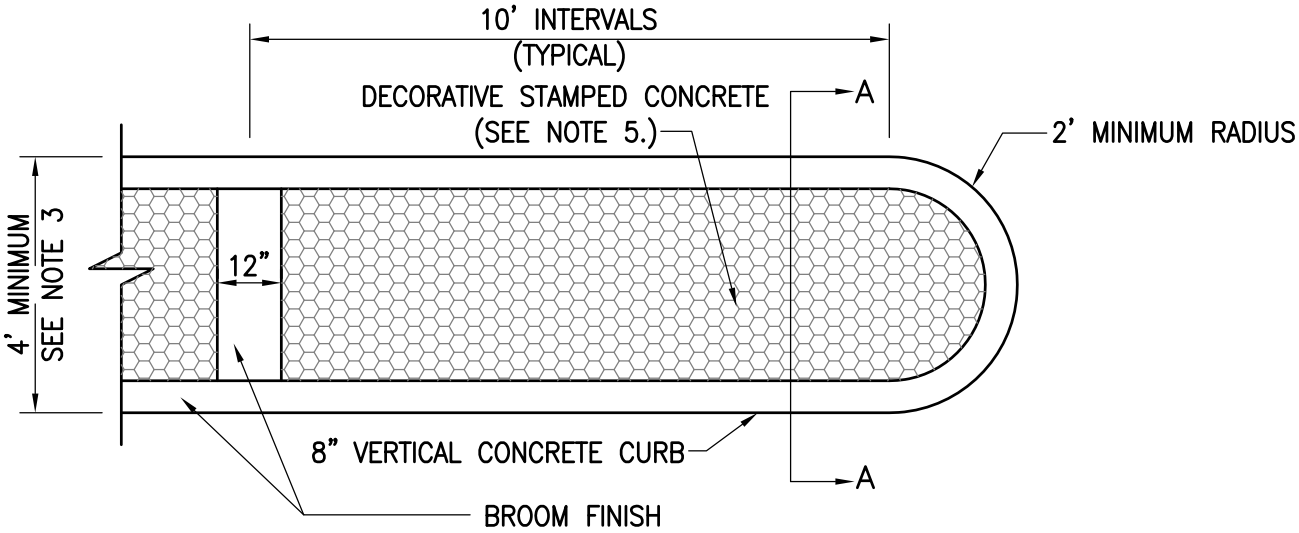

PLAN

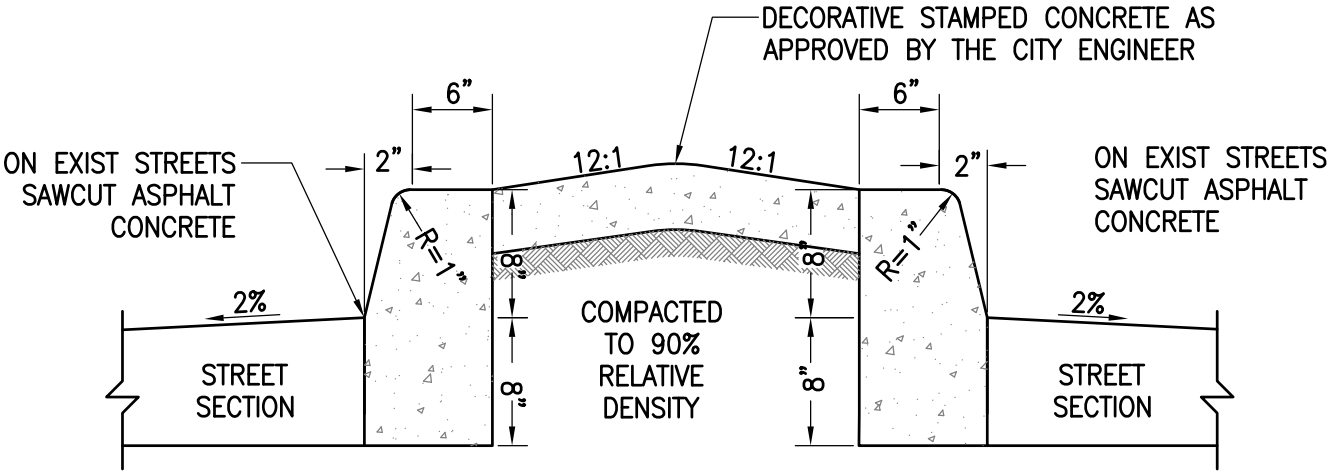

SECTION A–A

NOTES:

1. ON LANDSCAPED MEDIANS, CURB SHALL EXTEND TO BOTTOM OF AGGREGATE BASE.
2. PROVIDE WEAKENED PLANE JOINTS AT END OF RETURNS.
3. MEDIANS GREATER THAN 6 –FEET SHALL BE LANDSCAPED.
4. MEDIANS SHALL BE CONTINUOUS FROM START AT AN INTERSECTION FOR A MINIMUM DISTANCE OF 300 FEET. ALL DRIVEWAYS WITHIN THIS DISTANCE SHALL BE RIGHT–IN AND RIGHT–OUT ONLY. MEDIANS SHALL EXTEND A MINIMUM OF 100 FEET FROM THE FURTHEST EDGE OF ANY DRIVEWAY LOCATED WITHIN THE FIRST 300 FEET OF A STREET MEASURED FROM THE START POINT OF THE MEDIAN AT AN INTERSECTION.
5. MEDIANS ON ARTERIALS LESS THAN 6–FEET IN WIDTH SHALL BE PAVED WITH COLORED STAMPED CONCRETE WITHOUT 12–INCH BROOM FINISH AREAS.

REVISIONS		CITY OF KINGSBURG	STD No.
FEB 09		MEDIAN DETAIL	ST–9

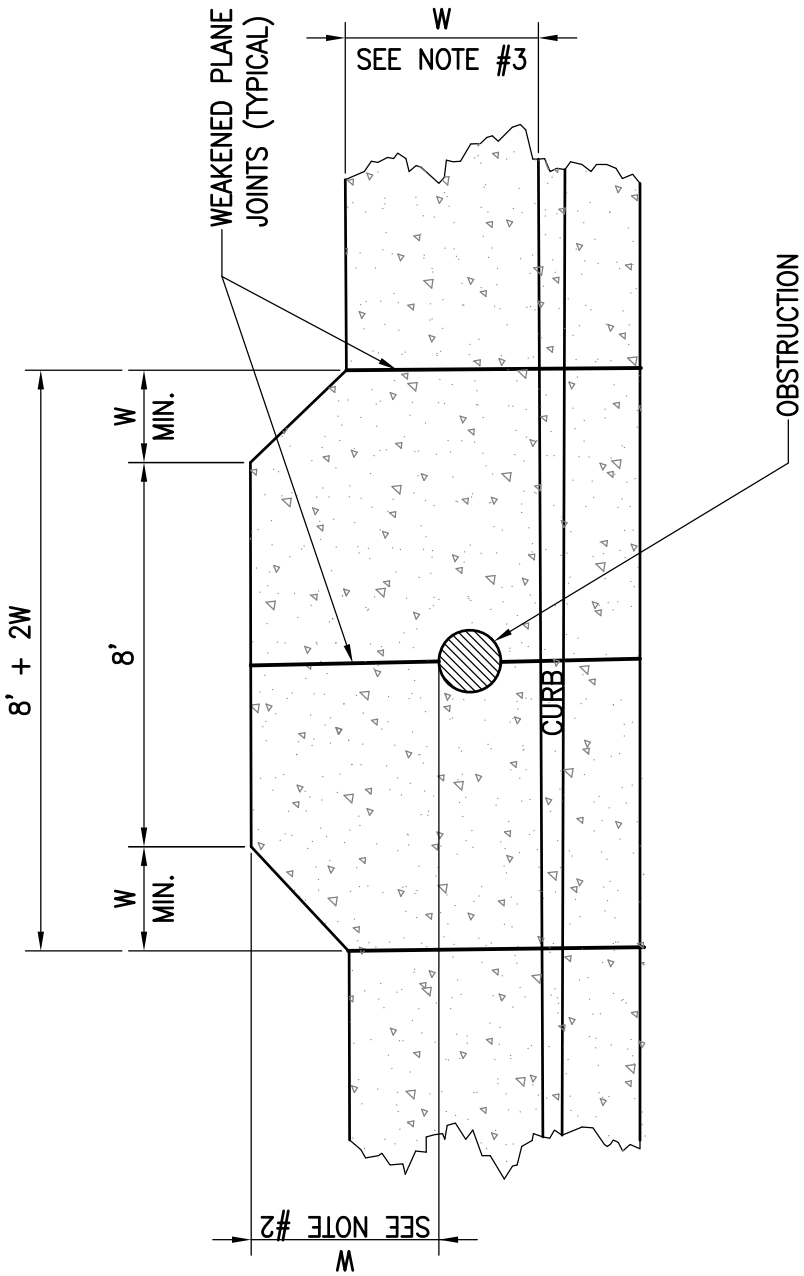

NOTES:

1. NO WIDENING IS NEEDED WHEN SPACE BETWEEN BACK OF CURB AND FACE OF OBSTRUCTION IS 42" OR MORE.
2. BACK OF WIDENED SIDEWALK SHALL REMAIN WITHIN THE STREET RIGHT OF WAY.
3. W = PROPOSED OR EXISTING SIDEWALK WIDTH.

REVISIONS		CITY OF KINGSBURG	STD No.
FEB 09		SIDEWALK WIDENING FOR OBSTRUCTIONS	ST–10

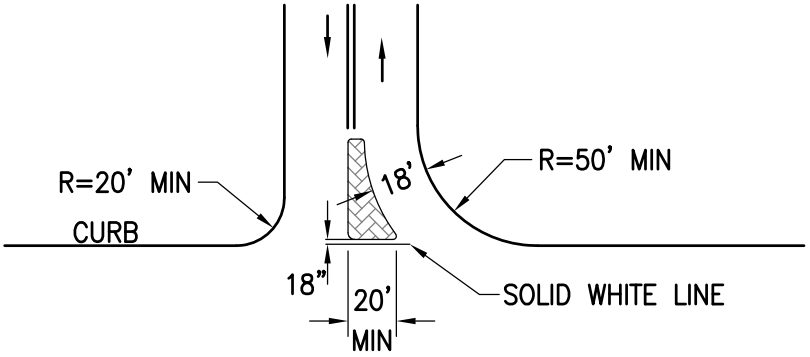

RIGHT–IN, RIGHT–OUT, LEFT–OUT
ACCESS DESIGN

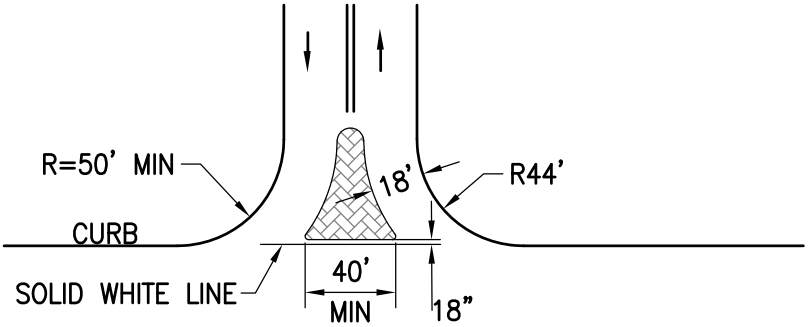

RIGHT–IN AND RIGHT–OUT
ACCESS DESIGN

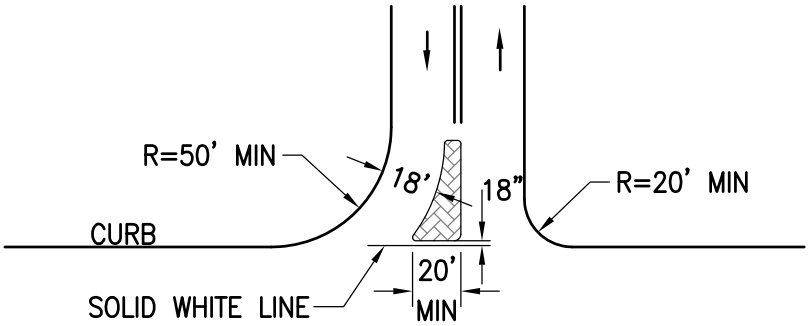

RIGHT–IN, RIGHT–OUT, LEFT–IN
ACCESS DESIGN

LEGEND;

RAISED CONCRETE STAMPED MEDIAN

REVISIONS		CITY OF KINGSBURG	STD No.
FEB 09		DRIVEWAY ACCESS DESIGNS	ST–11

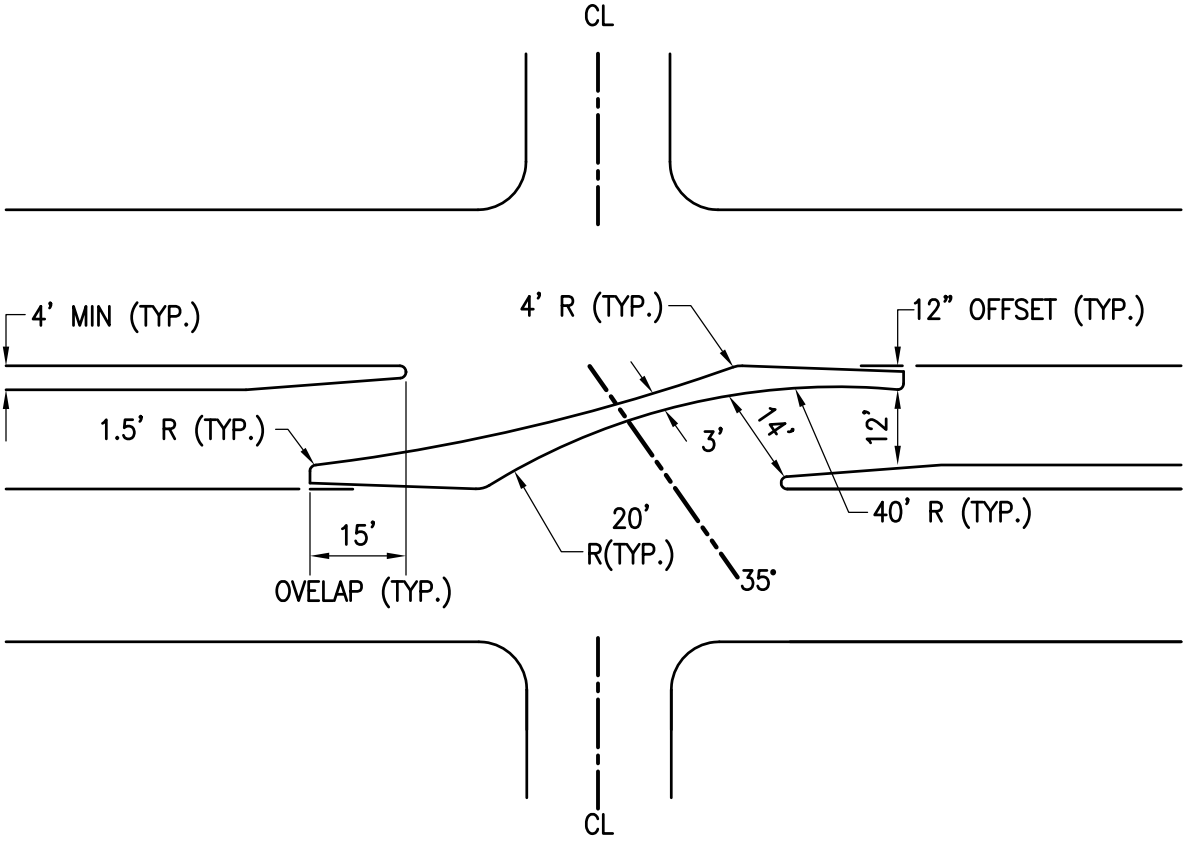

LEFT–IN ONLY MEDIAN DESIGN

REVISIONS		CITY OF KINGSBURG	STD No.
FEB 09		MEDIAN DESIGN	ST–12

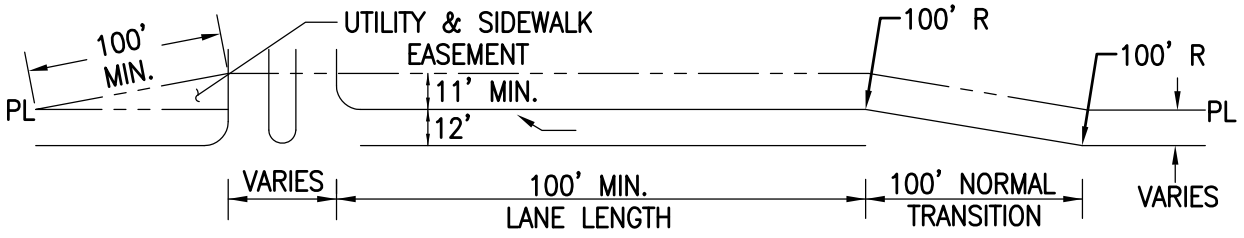

TYPICAL

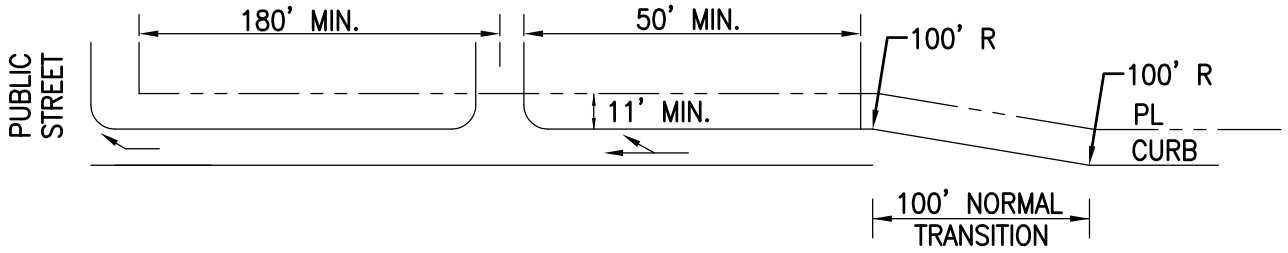

IN INTERSECTION RIGHT TURN LANE

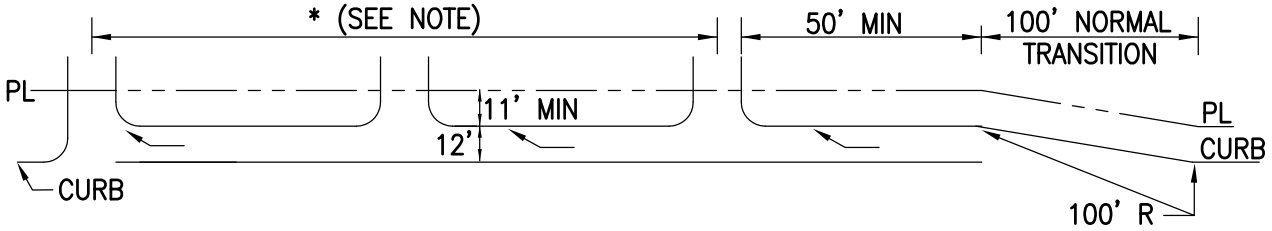

CONTINUOUS DECELERATION LANE

NOTE:
A MAXIMUM OF THREE DRIVEWAYS CAN BE CONNECTED WITH A CONTINUOUS DECELERATION LANE, UNLESS THE LANE IS AN EXTENSION OF A RIGHT TURN LANE AT AN INTERSECTION. THE MAXIMUM LENGTH OF A COMBINATION DECELERATION–RIGHT TURN LANE IS 1,320 FEET.

REVISIONS		CITY OF KINGSBURG	STD No.
FEB 09		DECELERATION LANES FOR DRIVEWAYS	ST–13

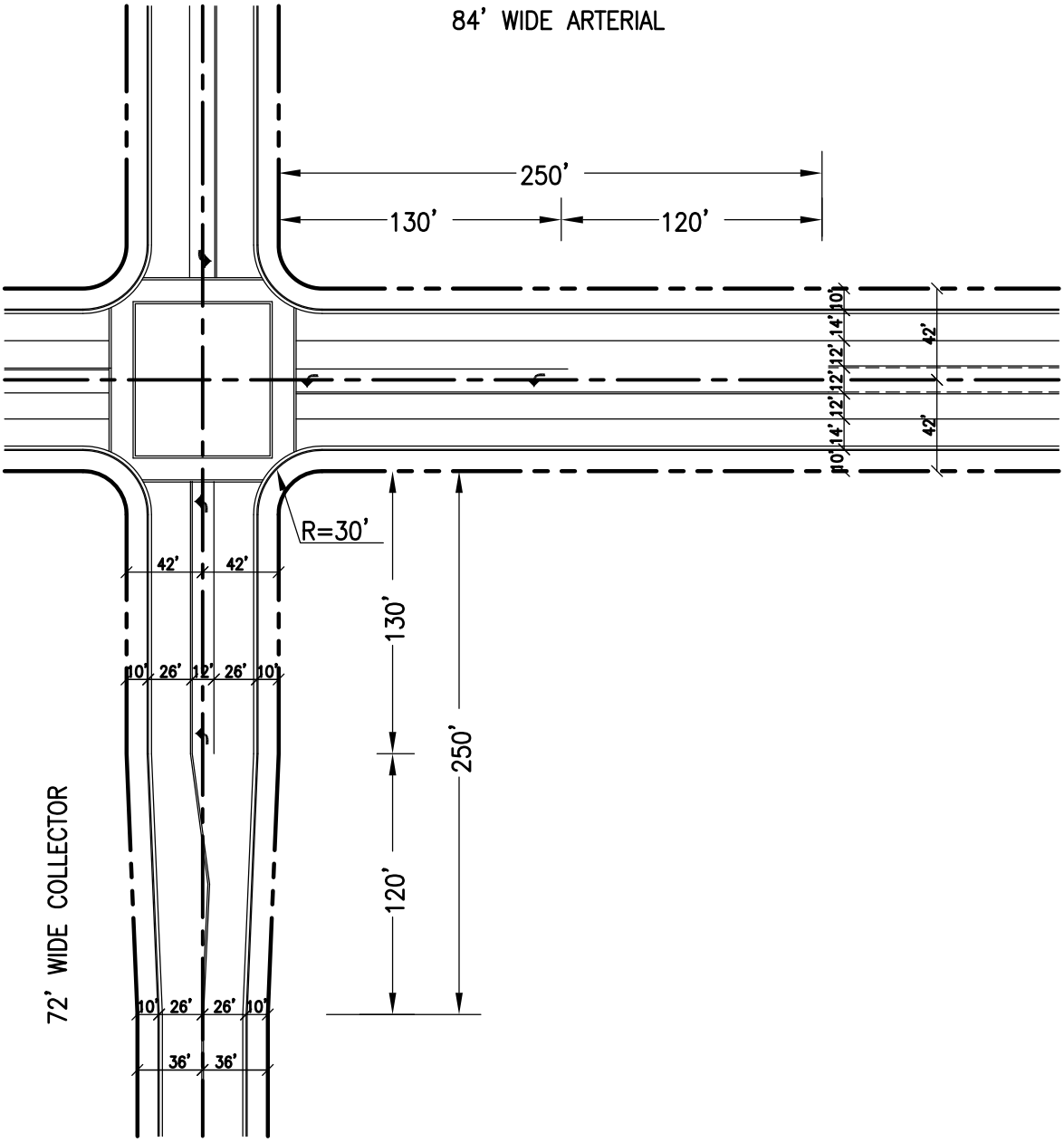

NOTES:

STRIPING FOR BIKE LANES SHALL BE INSTALLED UNLESS DIRECTED OTHERWISE BY THE CITY TRAFFIC ENGINEER.

REVISIONS		CITY OF KINGSBURG	STD No.
FEB 09		84' WIDE ARTERIAL AT COLLECTOR	ST-14

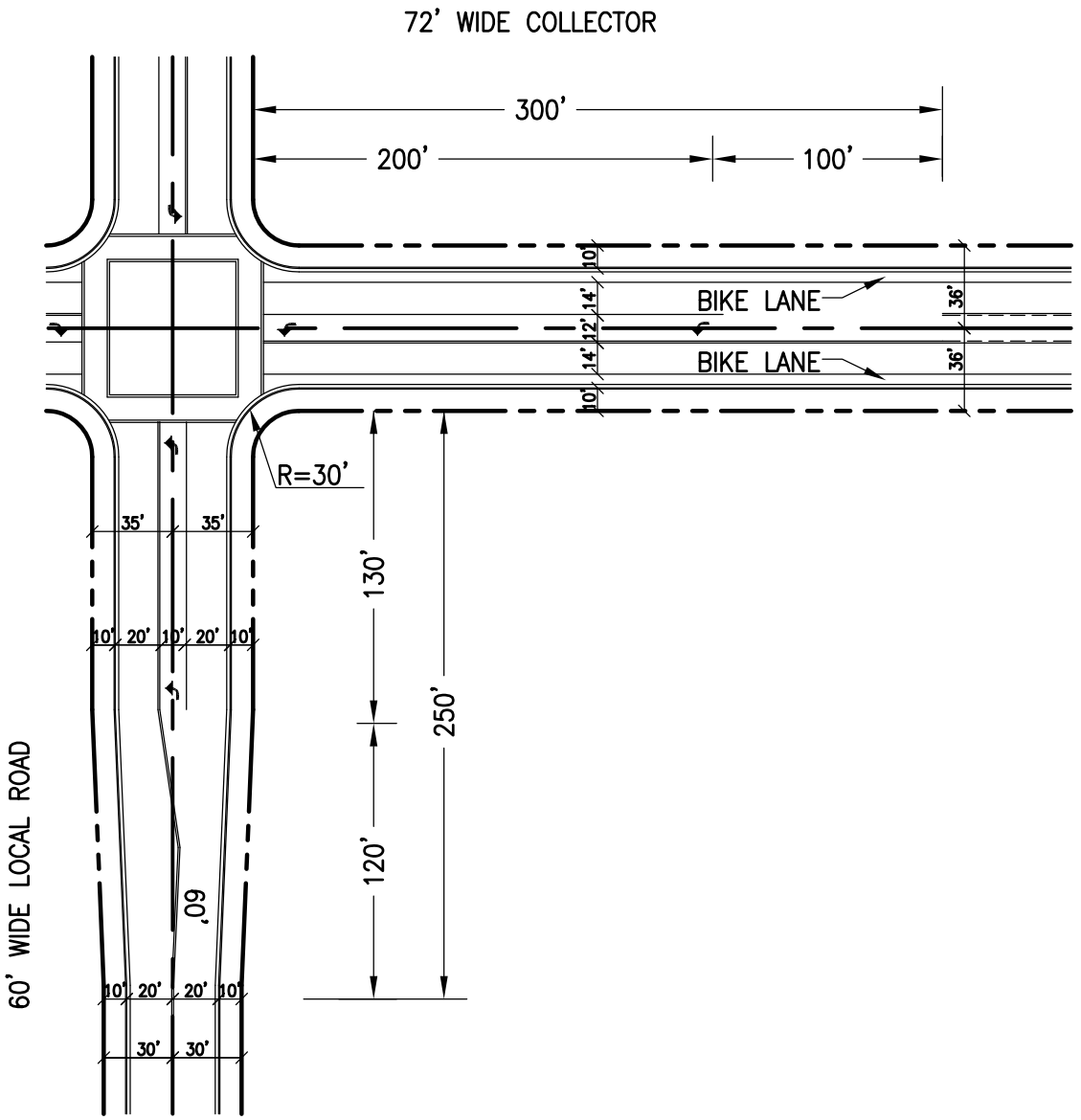

NOTES:
STRIPING FOR BIKE LANES SHALL BE INSTALLED UNLESS DIRECTED OTHERWISE BY THE CITY ENGINEER.

REVISIONS		CITY OF KINGSBURG	STD No.
FEB 09		MINOR COLLECTOR AT A COLLECTOR/ LOCAL ROAD	ST-15

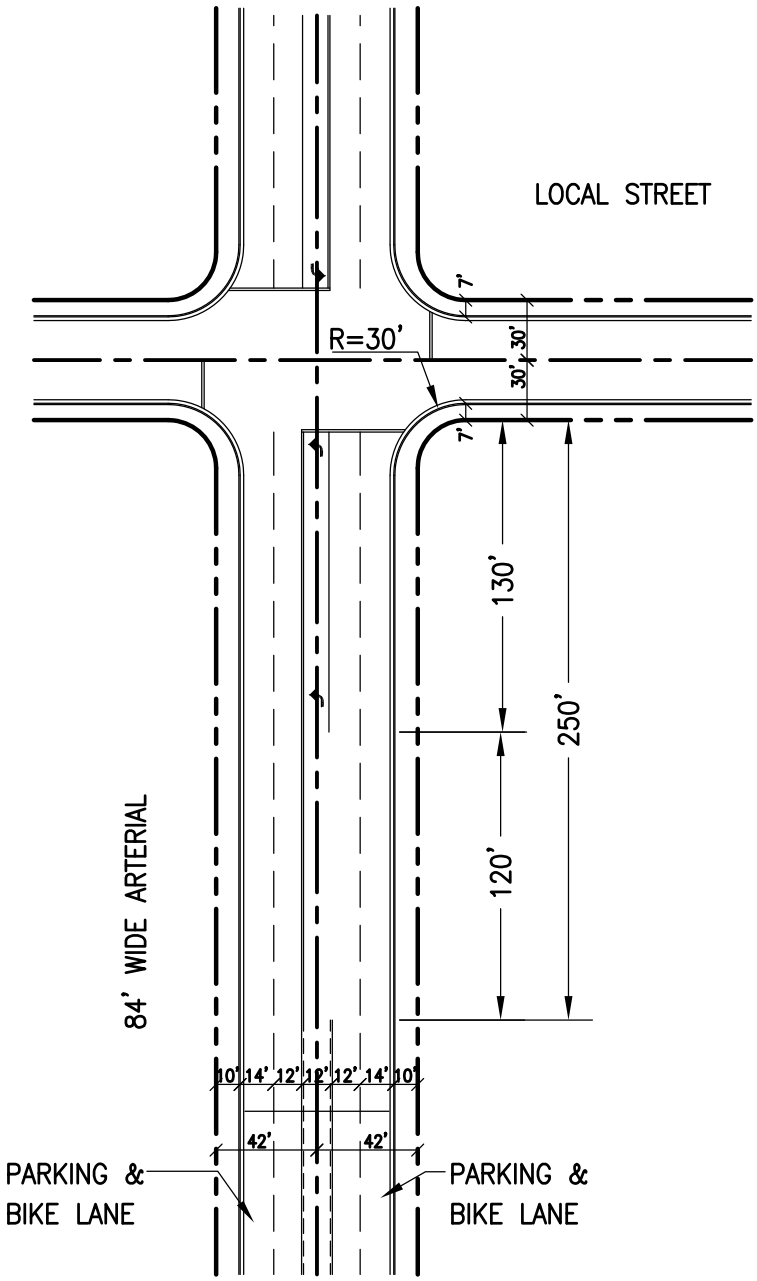

NOTES:
STRIPING FOR BIKE LANES SHALL BE INSTALLED UNLESS DIRECTED OTHERWISE BY THE CITY ENGINEER.

REVISIONS		CITY OF KINGSBURG	STD No.
FEB 09		LOCAL ROAD AT ARTERIAL	ST–16

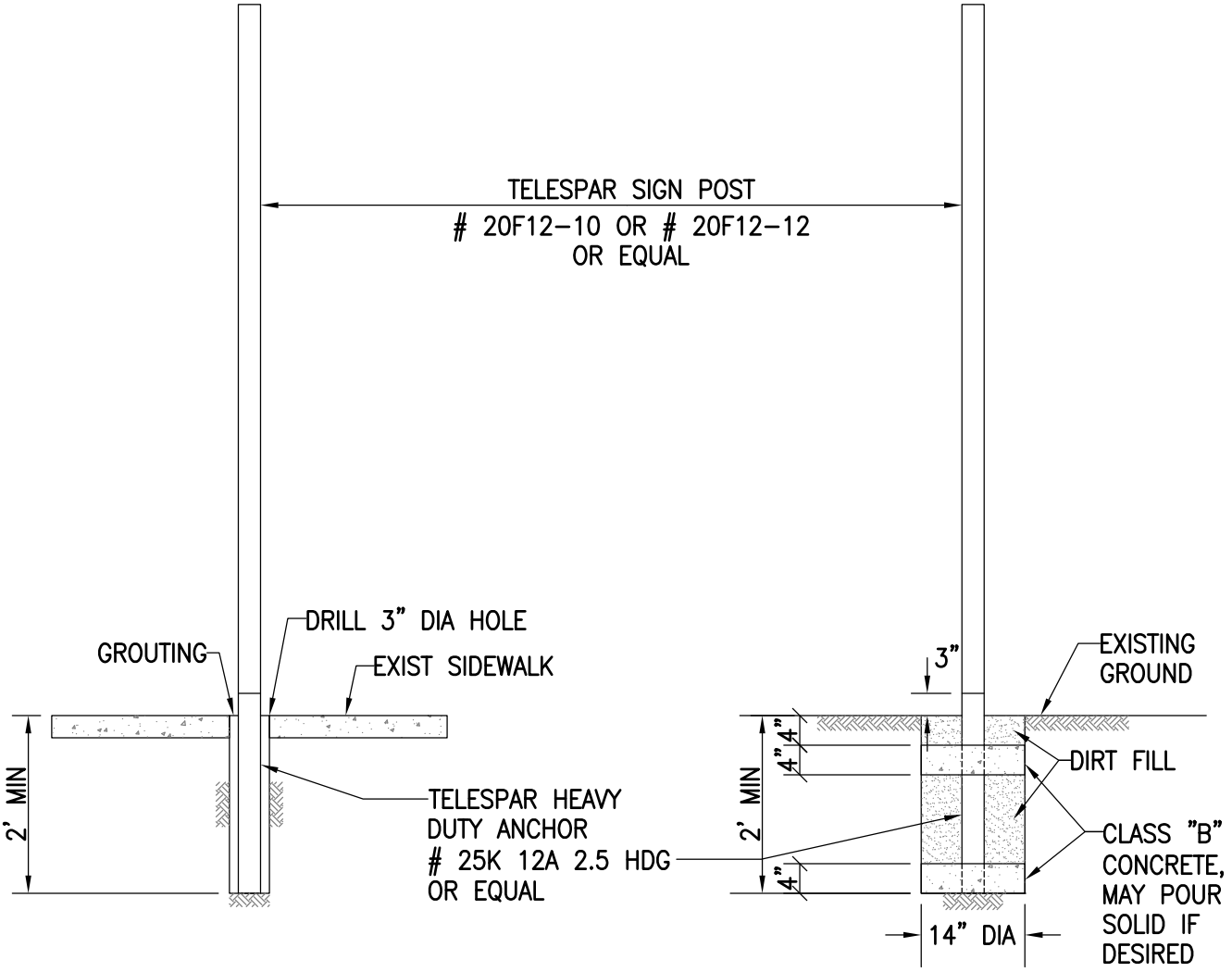

IN EXISTING SIDEWALK AREA

IN PLANT AREA

NOTE:

ANCHOR TO BE DRIVEN OR PLACED WITH 3" ABOVE GROUND LEVEL.

REVISIONS		CITY OF KINGSBURG	STD No.
FEB 09			
		SIGN POST	ST-17

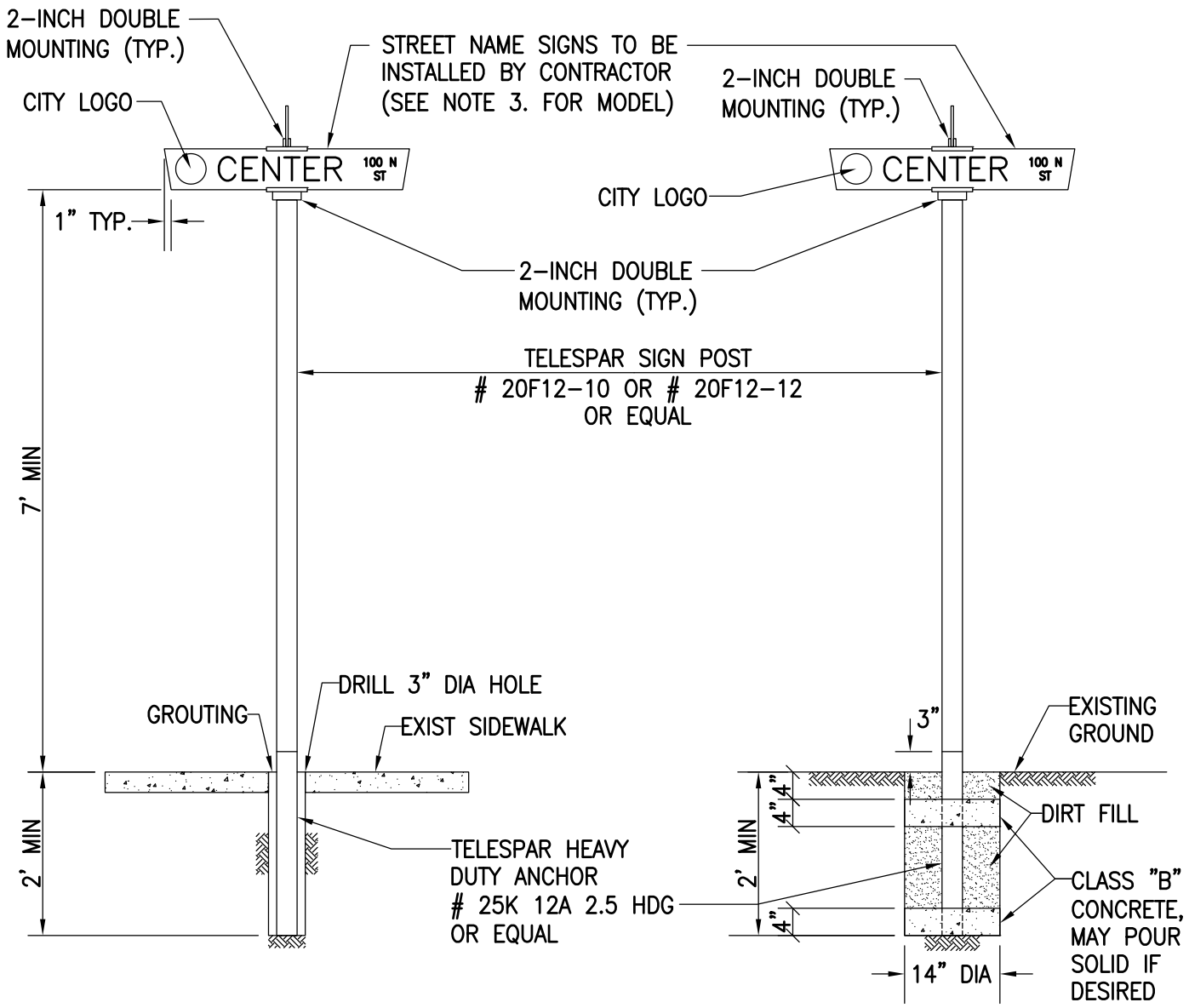

IN EXISTING SIDEWALK AREA

IN PLANT AREA

NOTE:

1. SEE DRAWING OF STANDARDS FOR LOCATION OF STREET NAME SIGNS.
2. ANCHOR TO BE DRIVEN OR PLACED WITH 3" MAXIMUM ABOVE GROUND LEVEL.
3. STREET SIGNS SHALL BE WESTERN HIGHWAY PRODUCTS, INC. MODEL NO. P9FL-BLUE OR EQUAL ENAMELED WITH GOLD BEADED LETTERS AND CITY LOGO.

REVISIONS		CITY OF KINGSBURG	STD No.
FEB 09			
		STREET NAME SIGN	ST-18

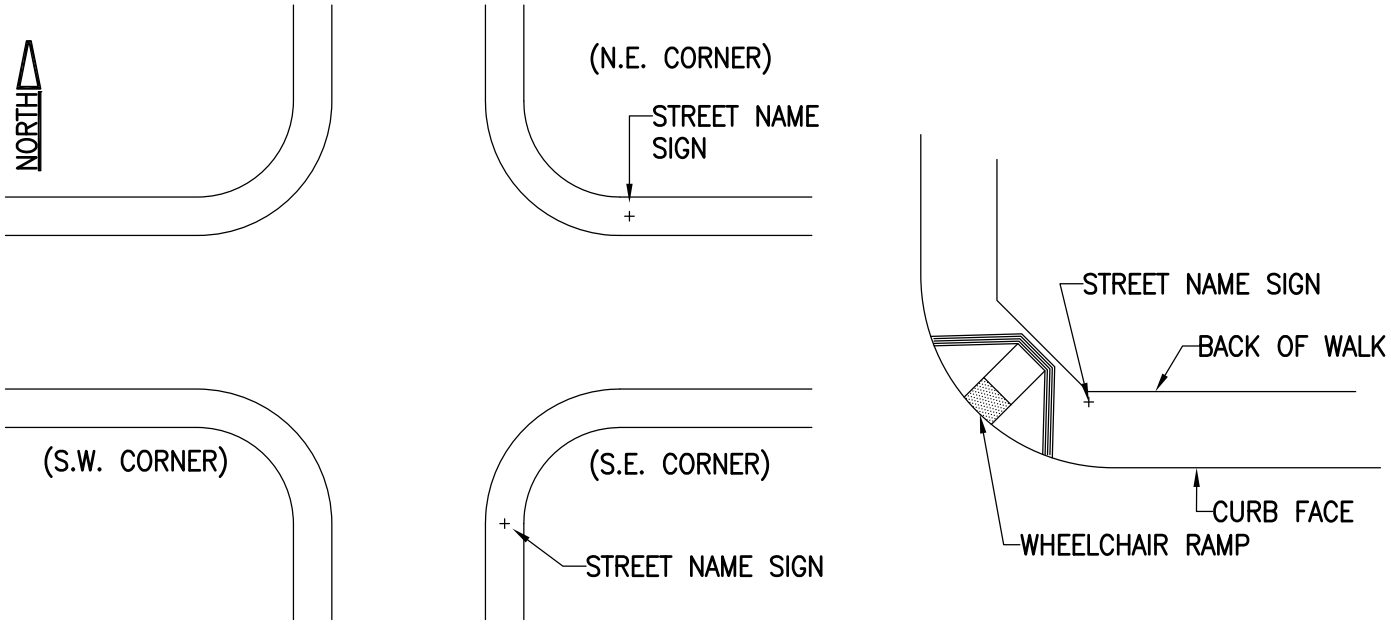

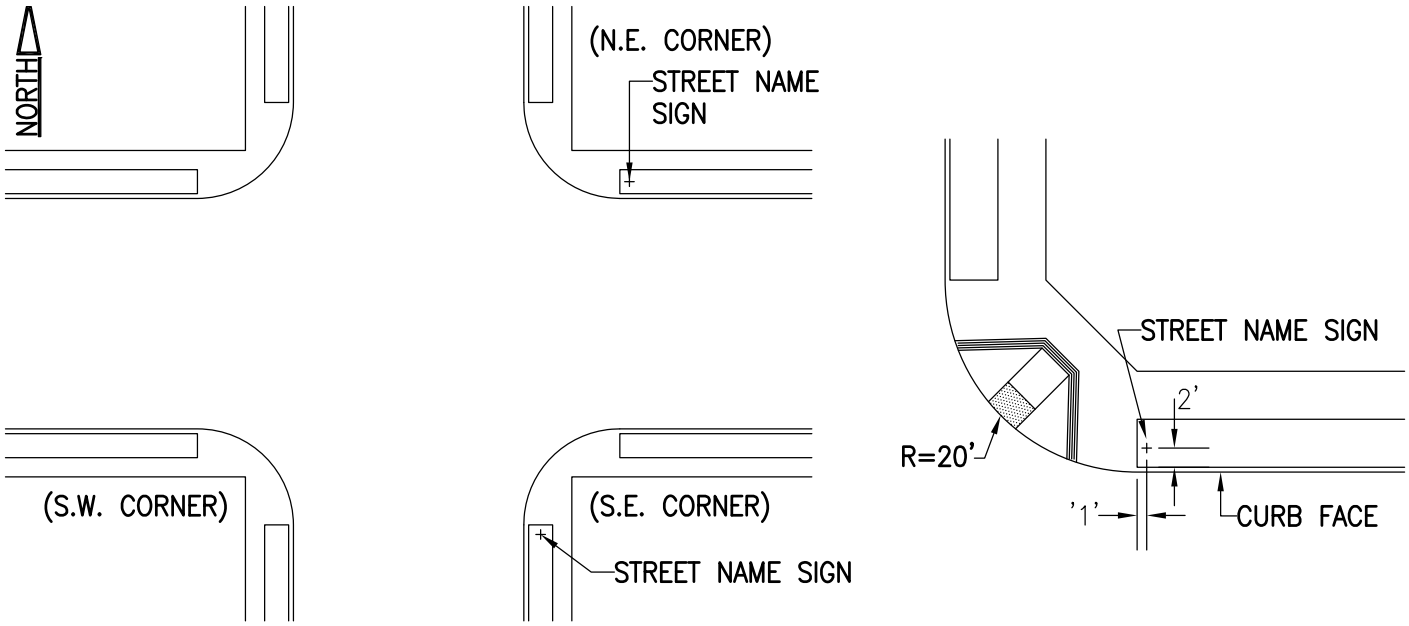

NOTE:

1. DRILL 3" DIA HOLE IN CONCRETE IF SOGN INSTALLED AFTER SIDEWALK HAS BEEN CONSTRUCTED.

2. SIGN LOCATION SHALL BE AS FOLLOWS:
   ON RESIDENTIAL STREETS: N.E. OR S.E. CORNER.
   ON MAJOR ARTERIALS: ON BOTH SIDES OF THE STREET.

REVISIONS		CITY OF KINGSBURG	STD No.
FEB 09		STREET SIGN LOCATION	ST–19

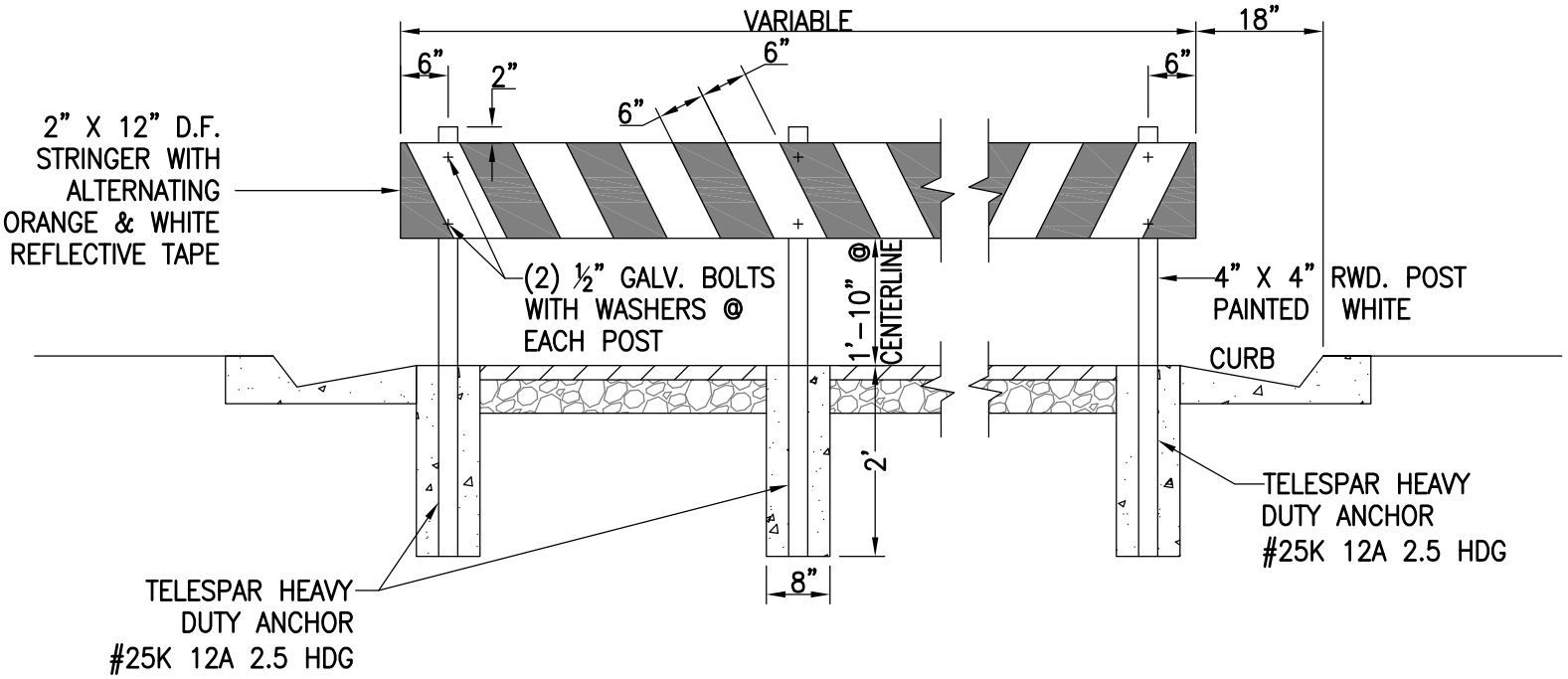

SECTION

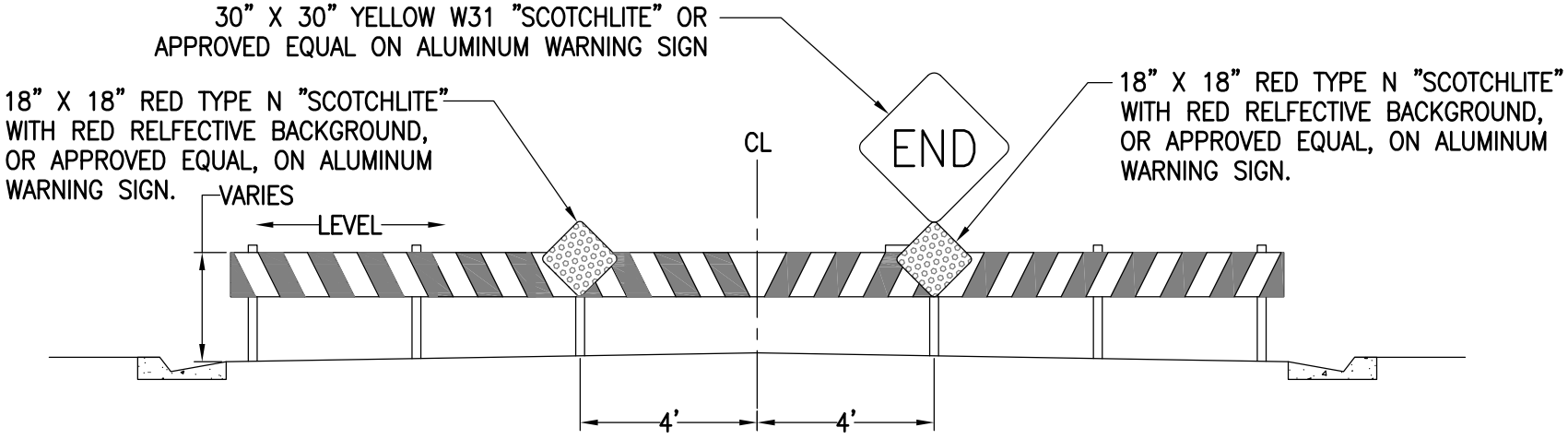

ELEVATION

REVISIONS

FEB 09

CITY OF KINGSBURG

DEAD END STREET BARRICADE

STD No. ST-20

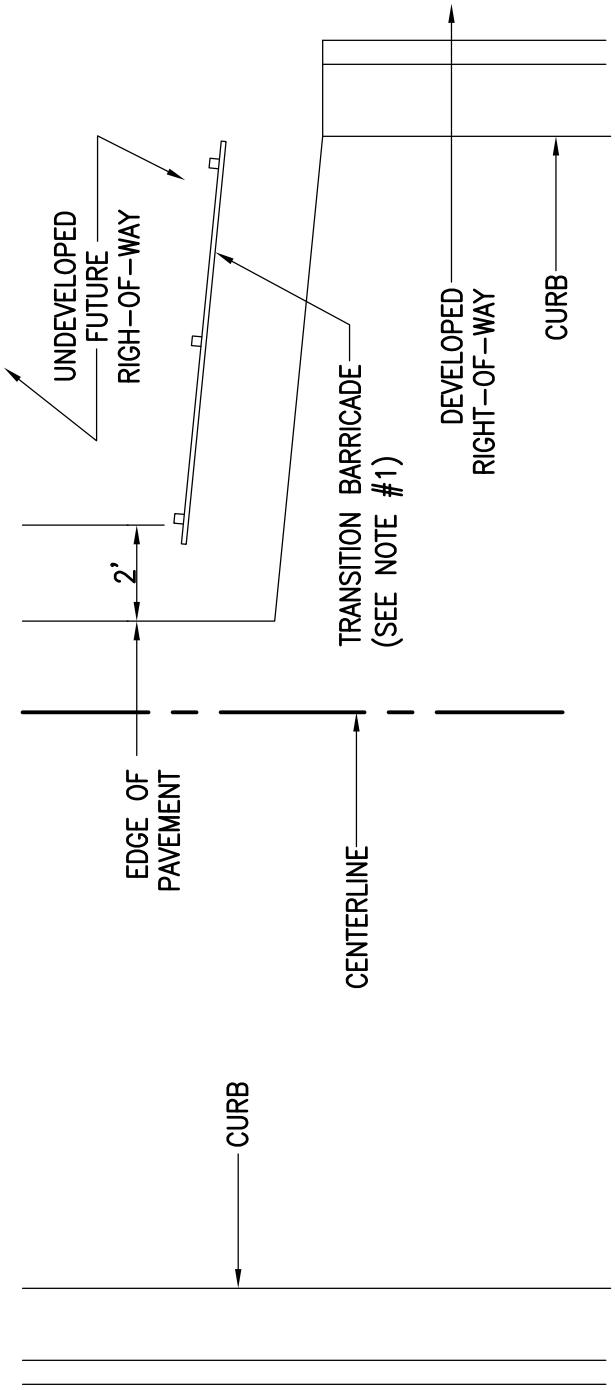

PLAN

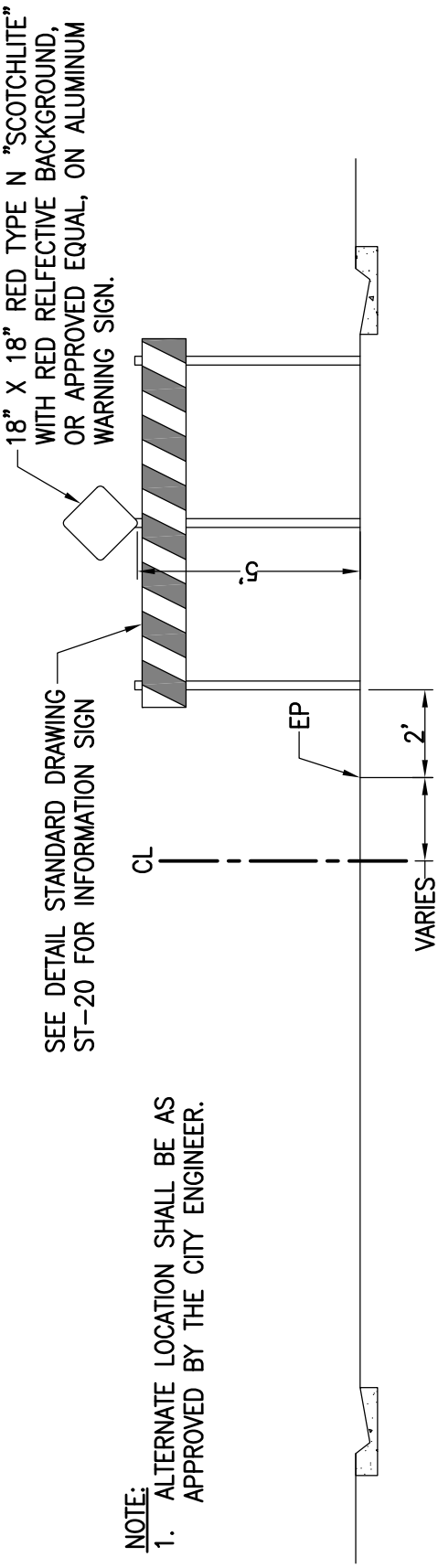

PROFILE

NOTE:
1. ALTERNATE LOCATION SHALL BE AS APPROVED BY THE CITY ENGINEER.

REVISIONS		CITY OF KINGSBURG	STD No.
FEB 09		STREET WIDTH TRANSITION BARRICADE	ST-21

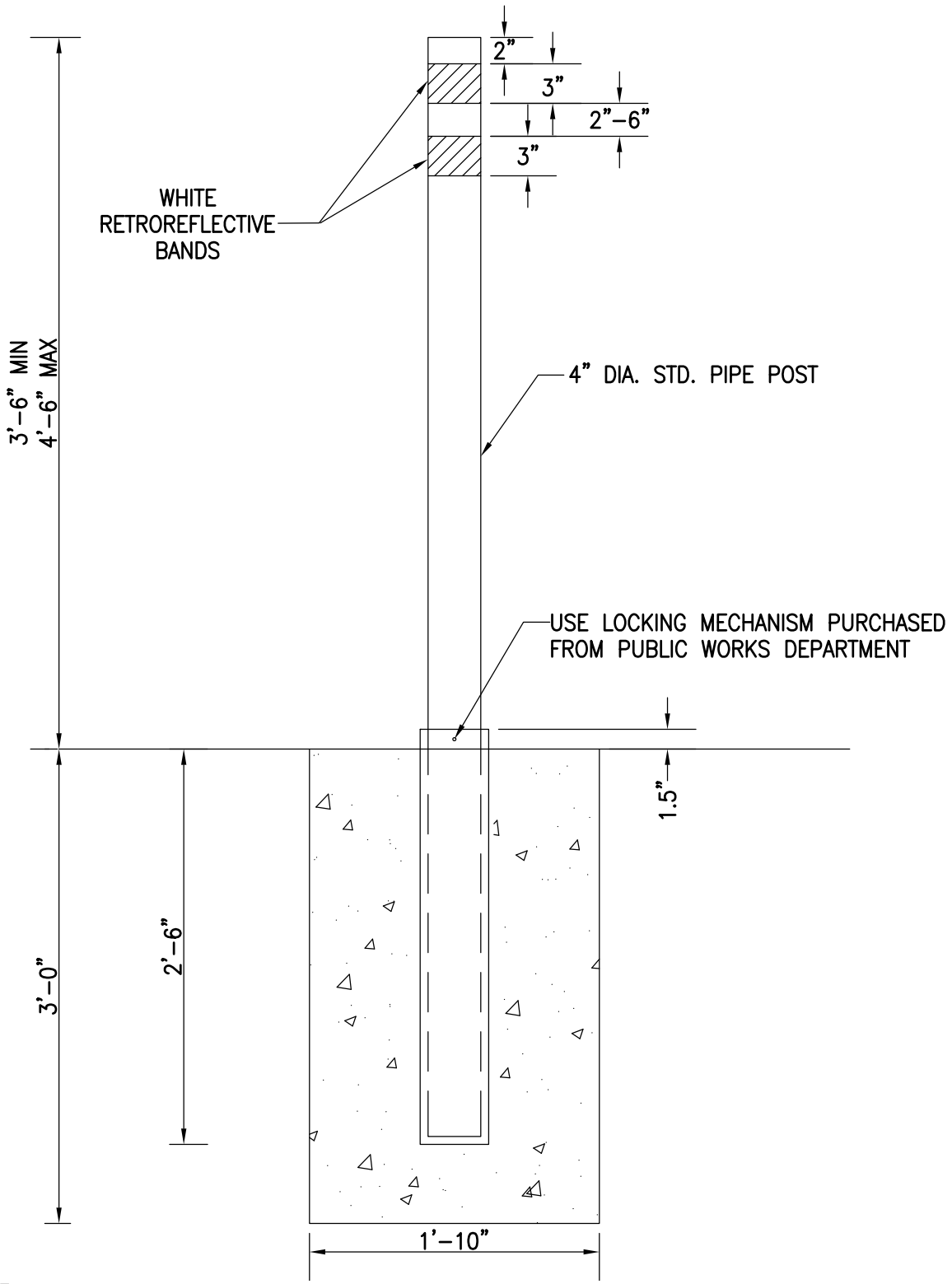

NOTE:

1. SEE CONSTRUCTION PLANS FOR INFORMATION ON LOCATION.
2. GALVANIZED STEEL SLEEVE TO BE CONSTRUCTED WITH A DIAMETER 1/10–INCH LARGER THAN POST. WALL THICKNESS TO BE SAME AS POST OR LARGER.
3. CONTRACTOR MAY SUBMIT ALTERNATIVE DETAILS FOR APPROVAL BY THE CITY ENGINEER.

REVISIONS		CITY OF KINGSBURG	STD No.
FEB 09		REMOVEABLE BOLLARD DETAIL	ST–22

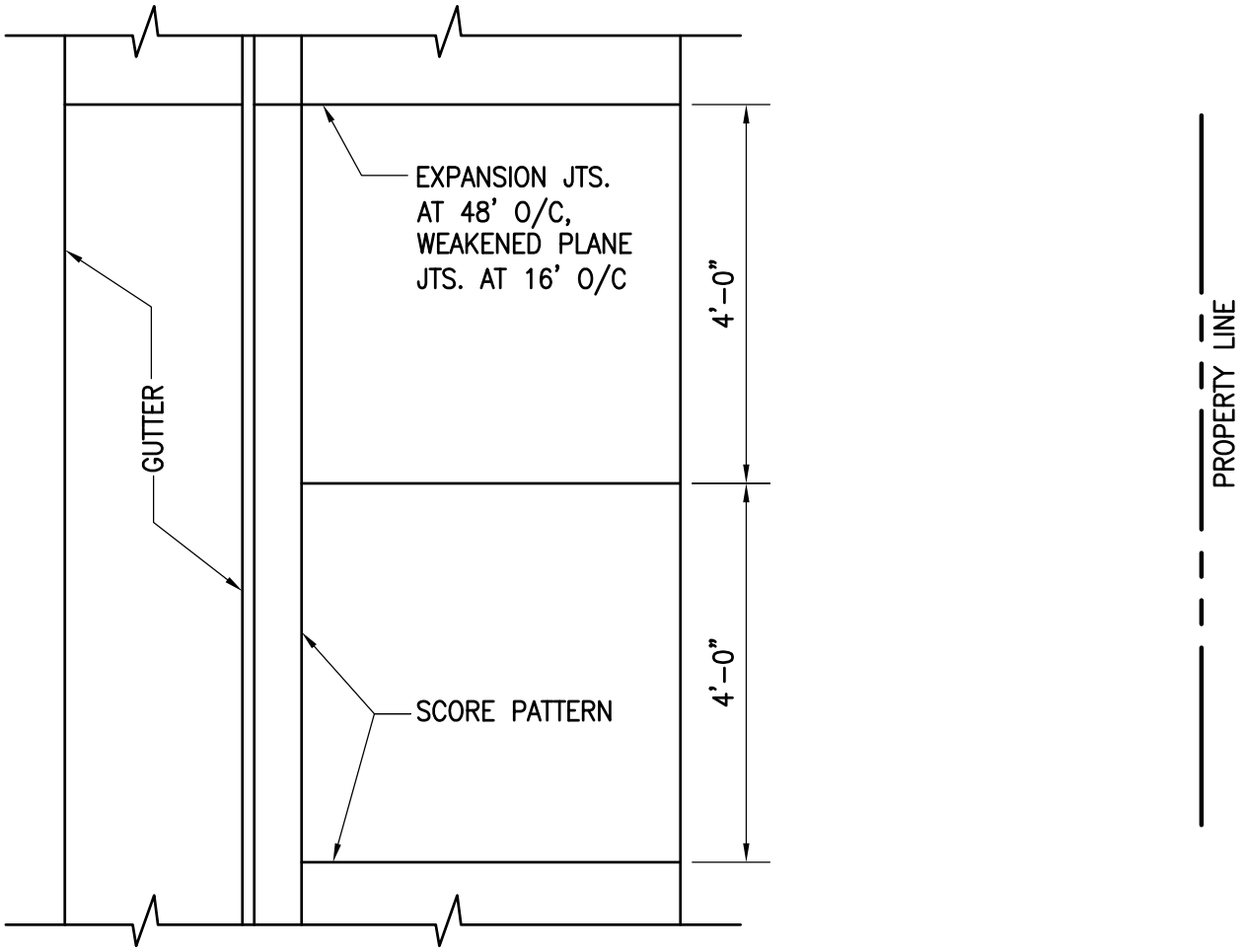

PLAN

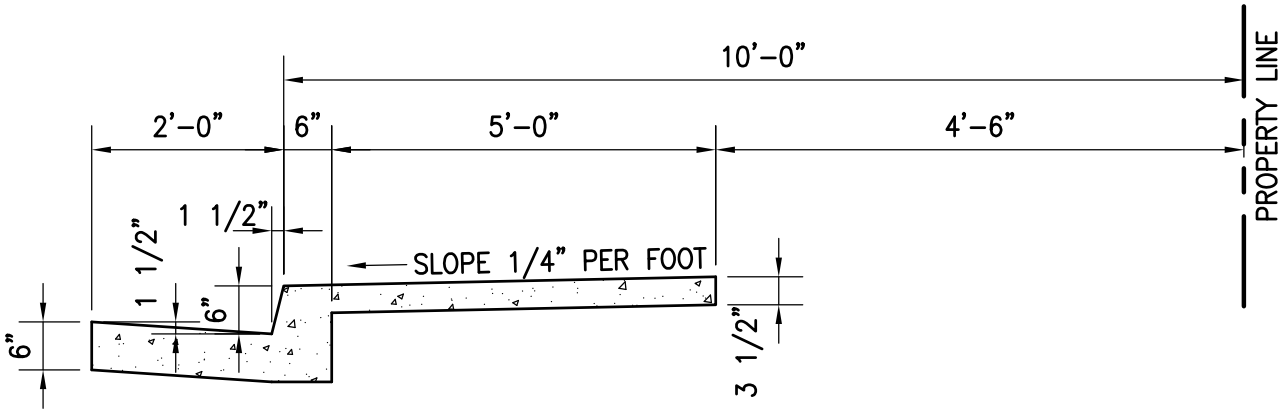

SECTION

REVISIONS		CITY OF KINGSBURG	STD No.
FEB 09		CURB GUTTER AND RESIDENTIAL SIDEWALK	ST-23

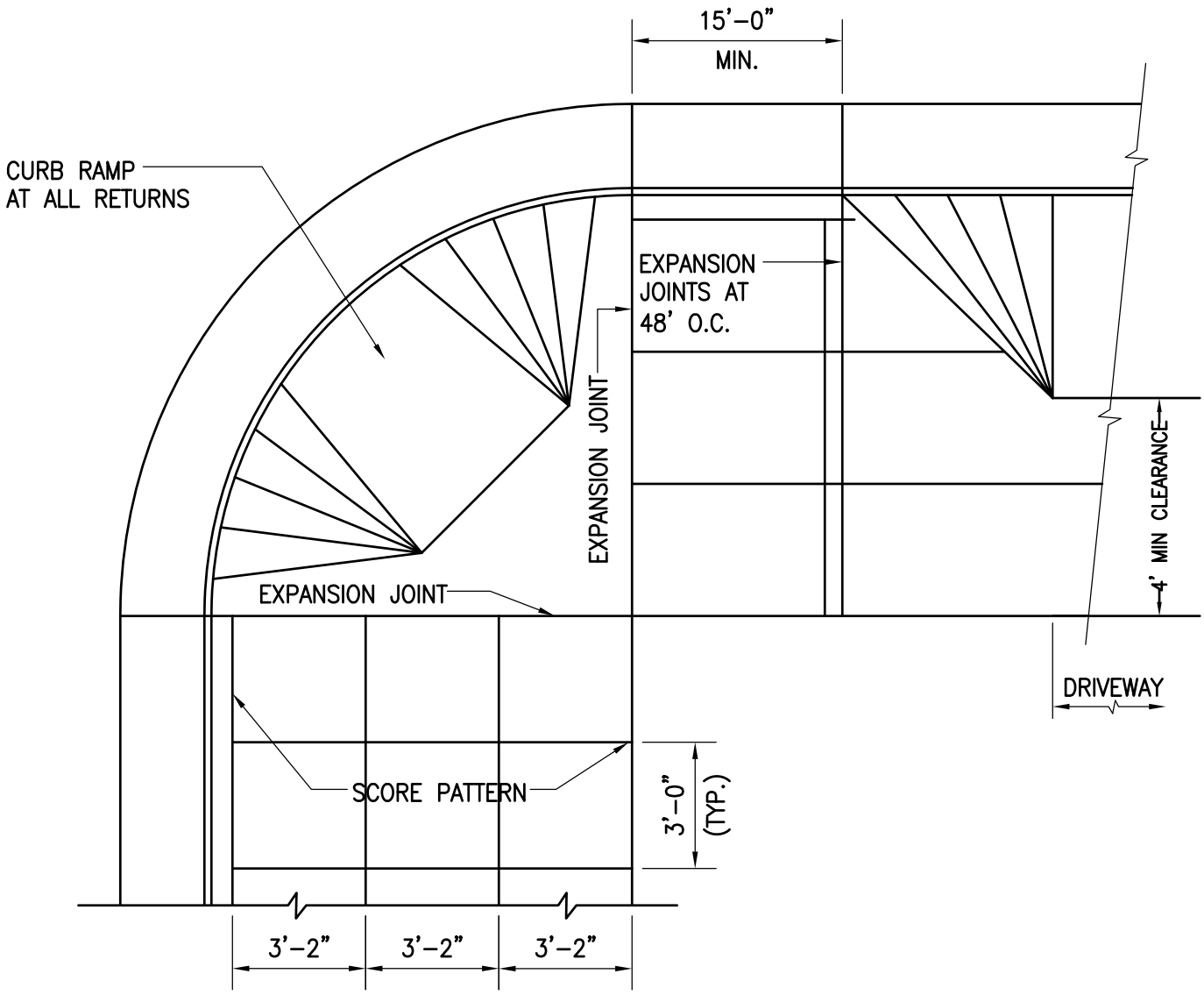

PLAN

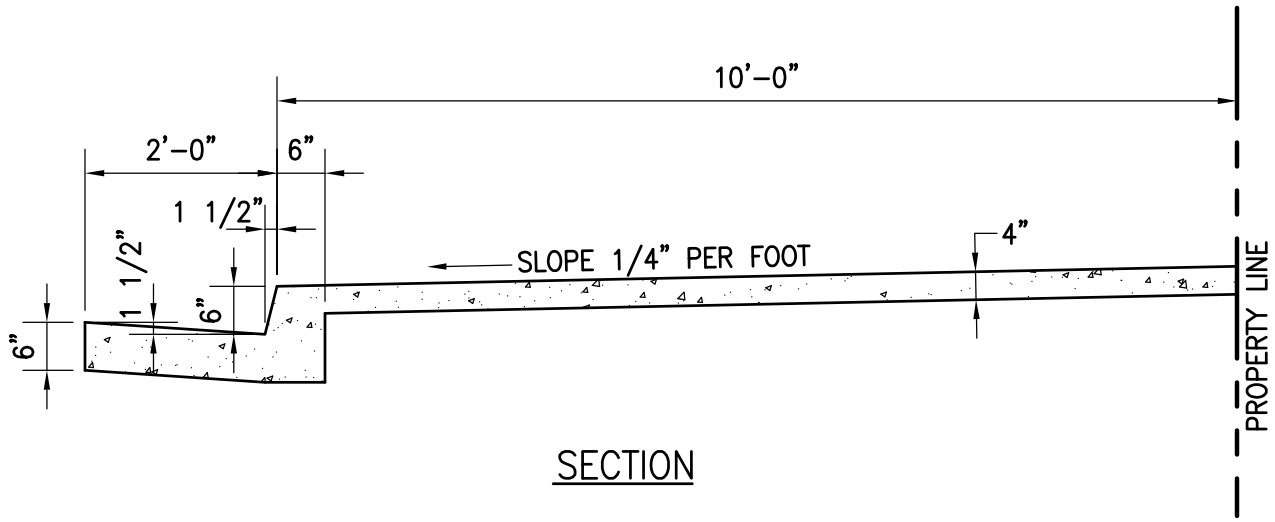

SECTION

REVISIONS	
FEB 09	

CITY OF KINGSBURG

CURB & GUTTER AND 10'
COMMERCIAL SIDEWALK

STD No.
ST-24

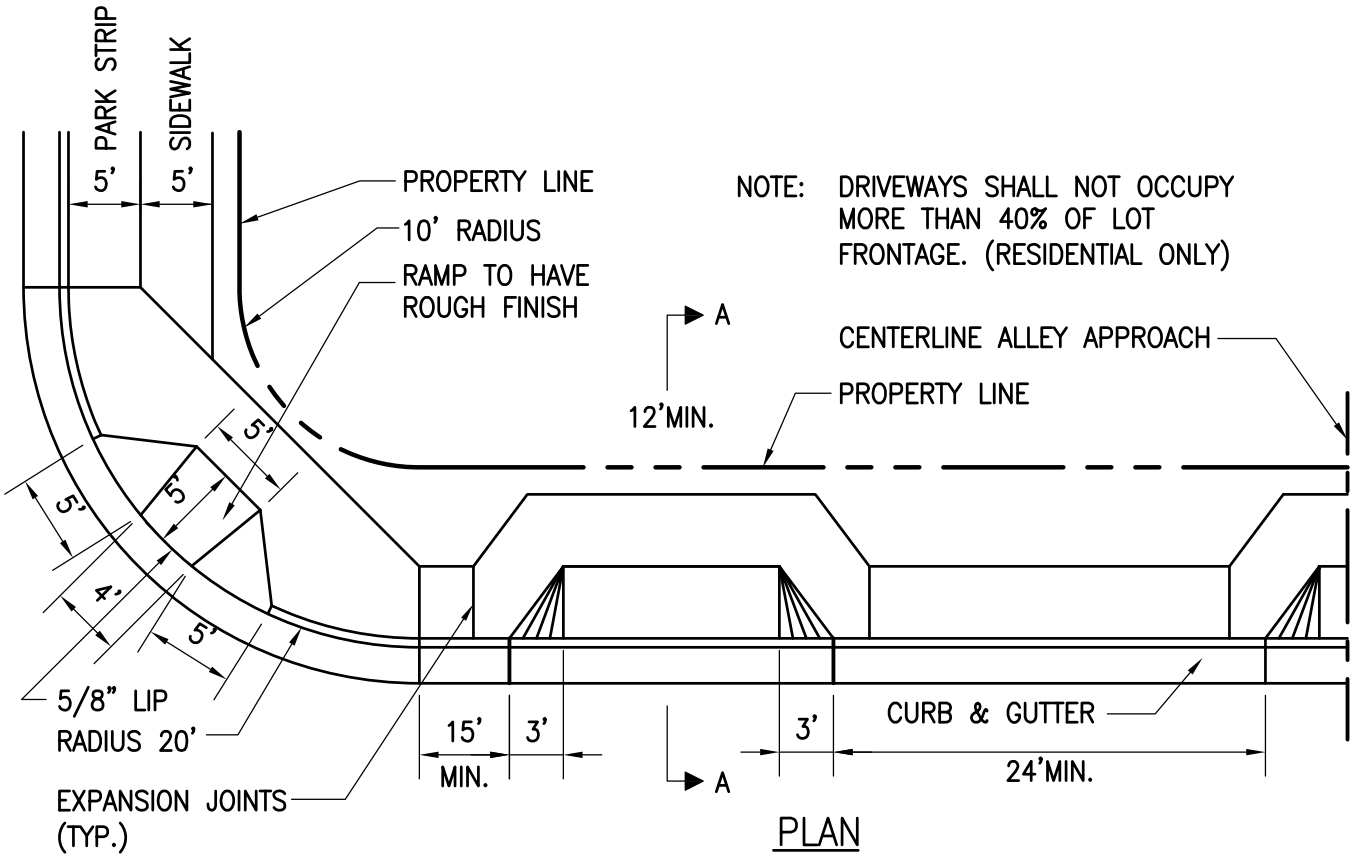

PLAN

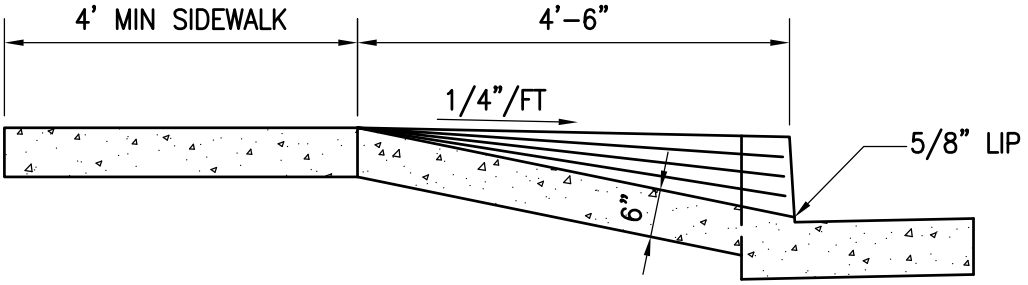

NOTE:

1. MAX WIDTH = 40% OF LOT WIDTH

SECTION A – DRIVE APPROACH

REVISIONS		CITY OF KINGSBURG	STD No.
FEB 09		RESIDENTIAL DRIVE APPROACH AND CURB RETURN	ST–25

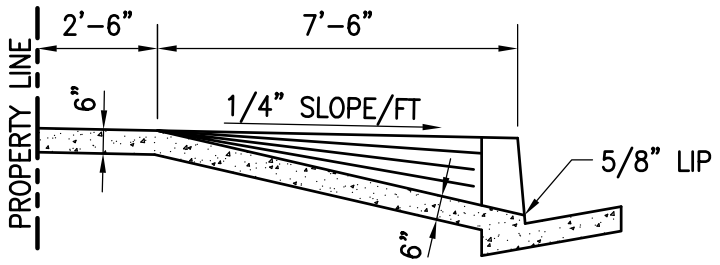

SECTION A

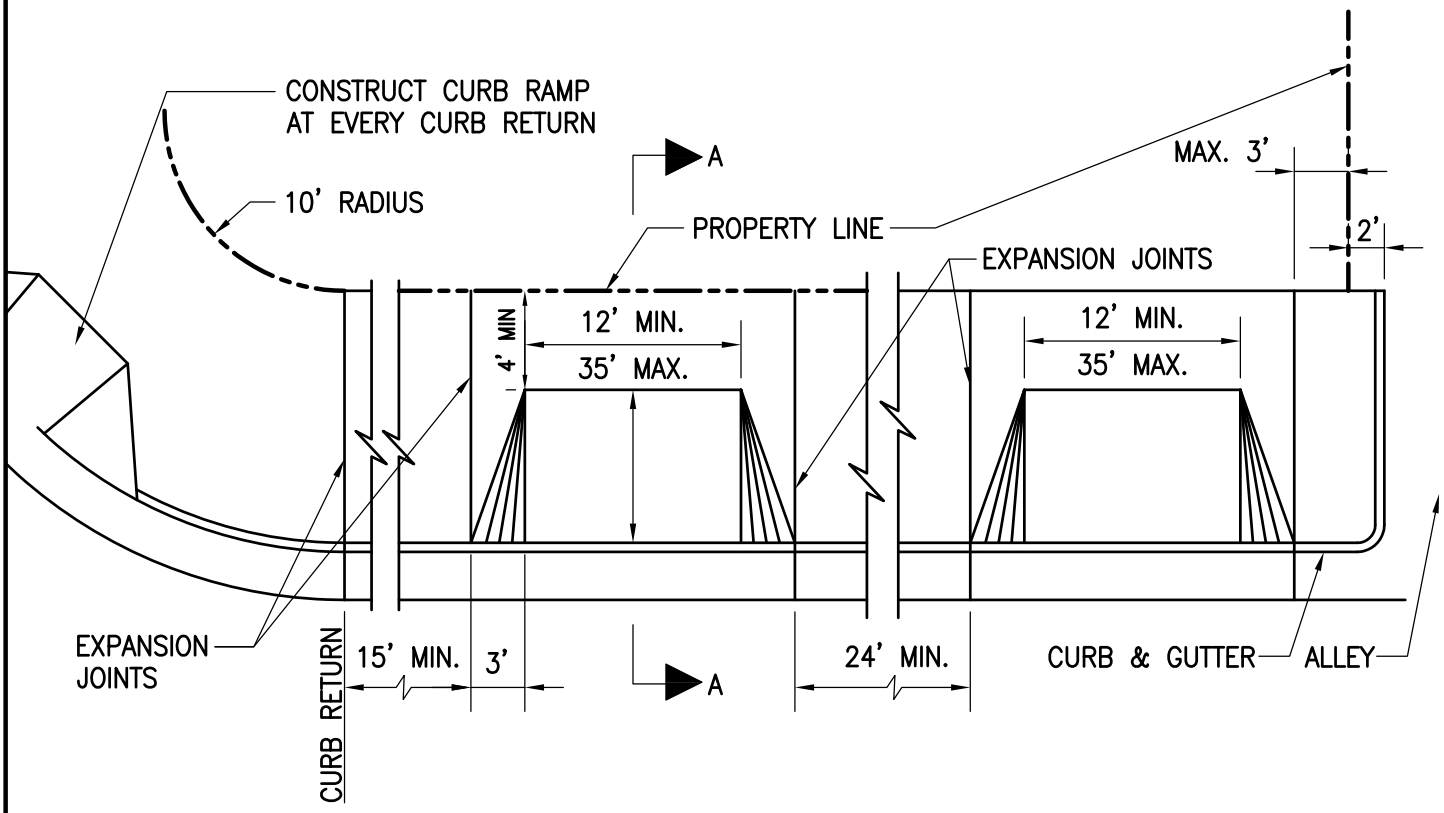

STANDARD COMMERCIAL CURB, GUTTER AND SIDEWALK

NOTE :
DRIVEWAYS SHALL NOT OCCUPY MORE THAN 40% OF LOT FRONTAGE.

REVISIONS		CITY OF KINGSBURG	STD No.
FEB 09		COMMERCIAL DRIVE APPROACH	ST-26

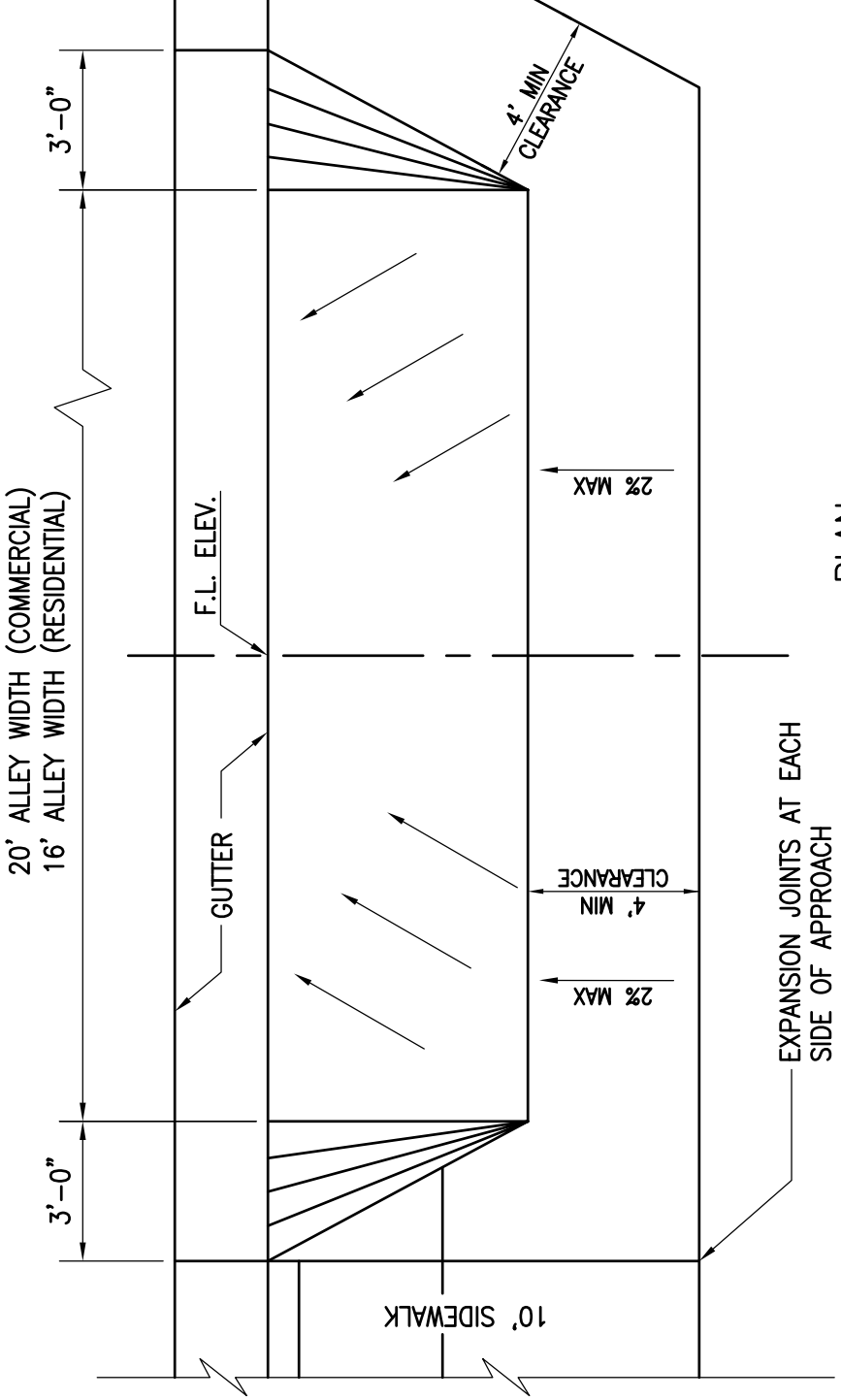

PLAN

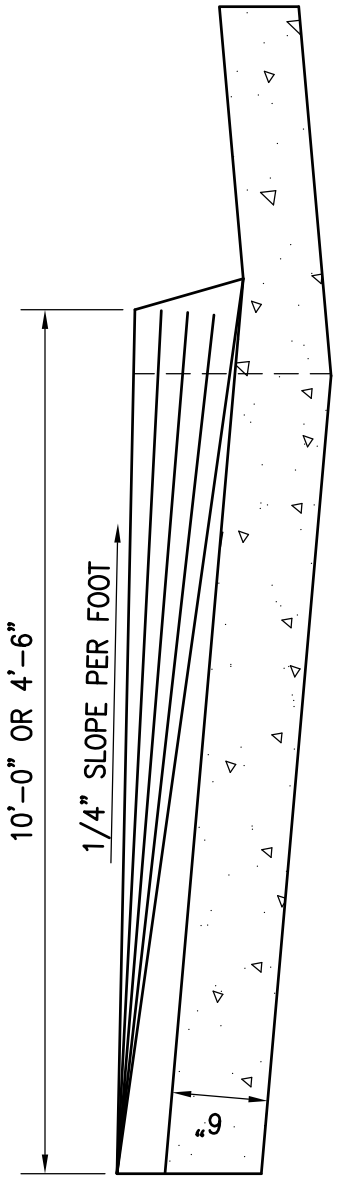

SECTION

ALLEY APPROACH

REVISIONS		CITY OF KINGSBURG	STD No.
FEB 09		ALLEY APPROACH	ST-27

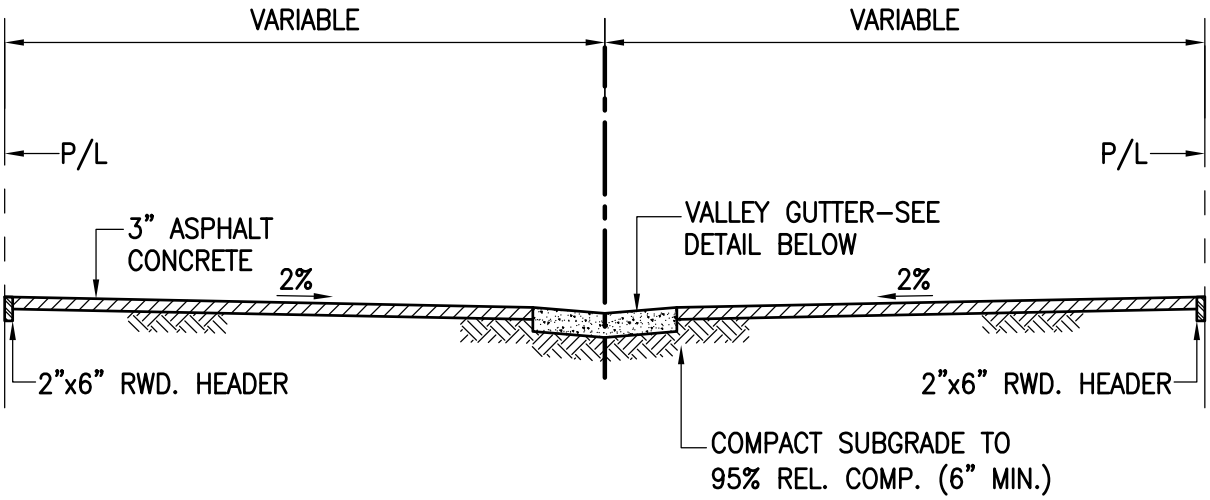

ELEVATION

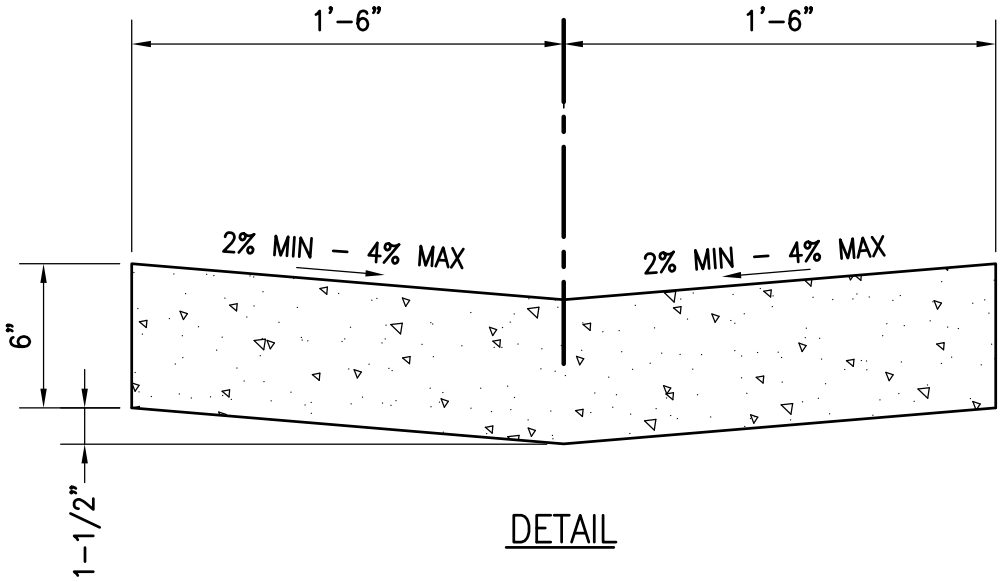

DETAIL

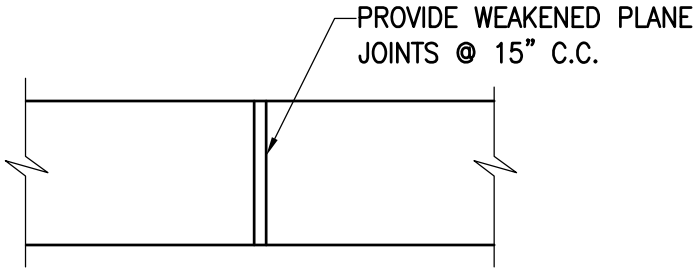

REVISIONS		CITY OF KINGSBURG	STD No.
FEB 09			
		ALLEY DETAIL	ST–28

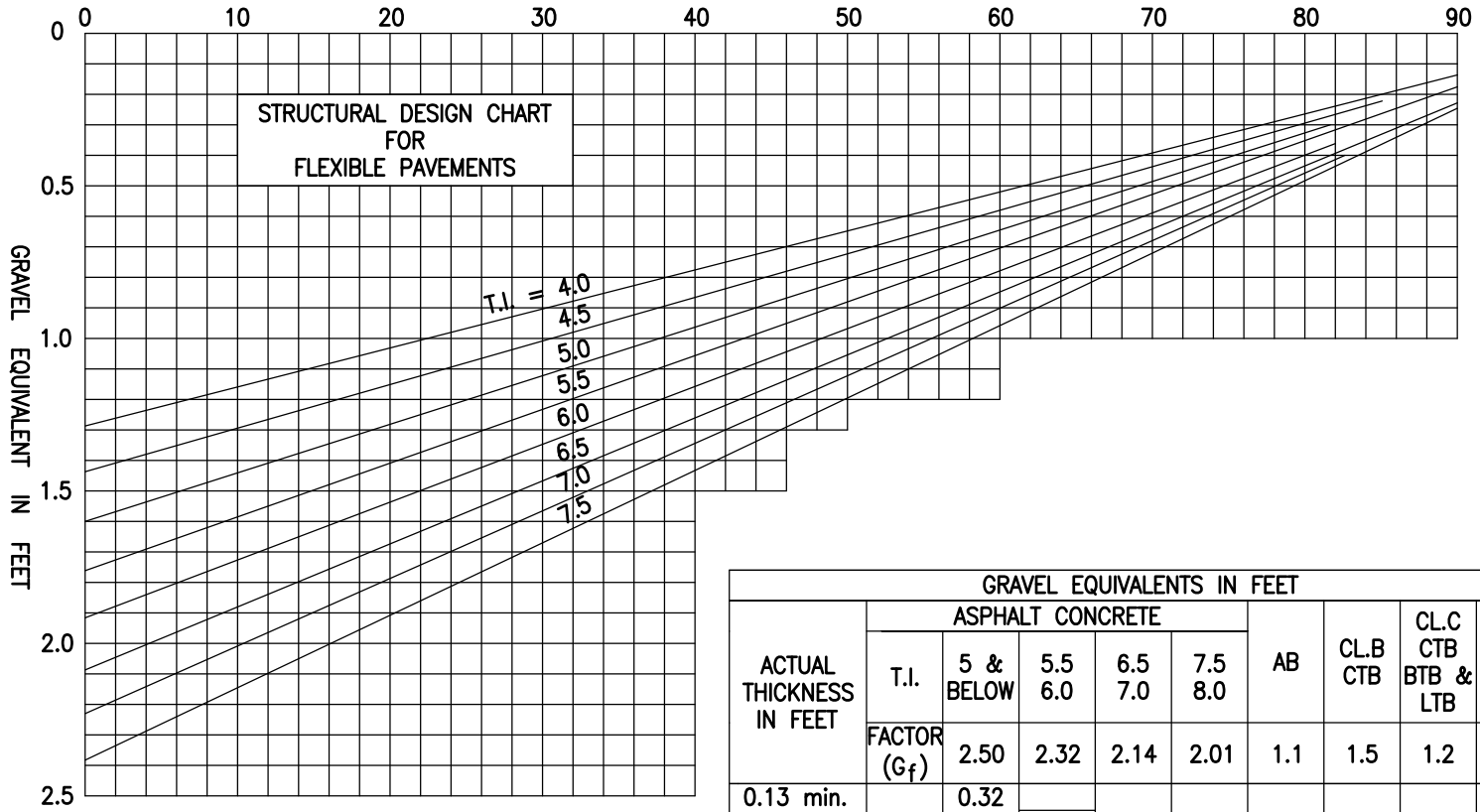

GENERAL NOTES :

ALL PAVEMENTS SHALL BE DESIGNED ACCORDING TO TEST METHOD NO. GALIF. 301-G AND PART VII PLANNING MANUAL OF INSTRUCTIONS, STATE OF CALIFORNIA WITH THE EXCEPTION THAT T.I.'S WILL BE DETERMINED FROM THE TRAFFIC INDEX CHART WHERE APPLICABLE. SOLID LINE INDICATES MINIMUM THICKNESS ALLOWED.

GRAVEL EQUIVALENTS IN FEET

ACTUAL THICKNESS IN FEET	ASPHALT CONCRETE					AB	CL.B CTB	CL.C CTB BTB & LTB	CL.D CTB & ASB
	T.I.	5 & BELOW	5.5 6.0	6.5 7.0	7.5 8.0				
	FACTOR (G_f)	2.50	2.32	2.14	2.01	1.1	1.5	1.2	1.0
0.13 min.		0.32							
0.15		0.38	0.35						
0.20		0.50	0.46	0.43					
0.25		0.63	0.58	0.54	0.50				
0.30		0.75	0.70	0.64	0.60				
0.35		0.88	0.81	0.75	0.70	0.39		0.42	0.35
0.40		1.00	0.93	0.86	0.80	0.44		0.48	0.40
0.45			1.04	0.96	0.90	0.50	0.68	0.54	0.45
0.50			1.16	1.07	1.01	0.55	0.75	0.60	0.50
0.55				1.18	1.11	0.61	0.83	0.66	0.55
0.60					1.21	0.66	0.90	0.72	0.60
0.65					1.31	0.72	0.98	0.78	0.65
0.70						0.77	1.05	0.84	0.70
0.75						0.83	1.13	0.90	0.80
0.80						0.88	1.20	0.96	0.80

REVISIONS

FEB 09

CITY OF KINGSBURG

PAVEMENT DESIGN CHART

STD No. ST-29

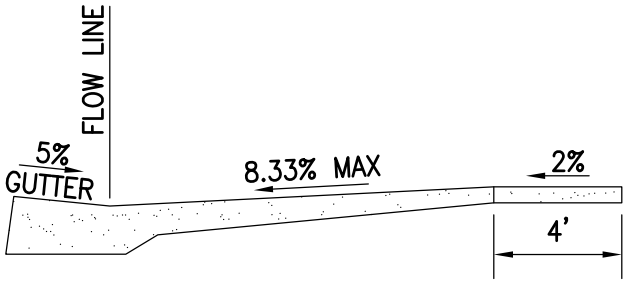

SECTION A–A

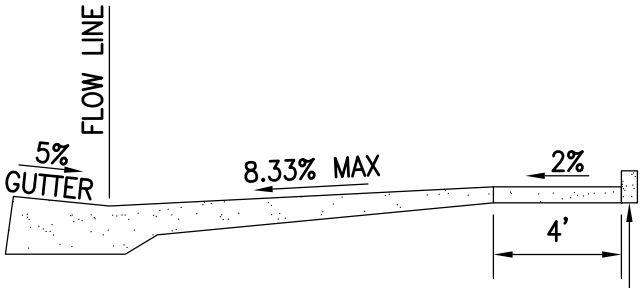

SECTION B–B

NOTES: (SLOPES)
1. 2% IS 1 IN 50
2. 5% IS 1 IN 20
3. 8.33% IS 1 IN 12
4. 10% IS 1 IN 10

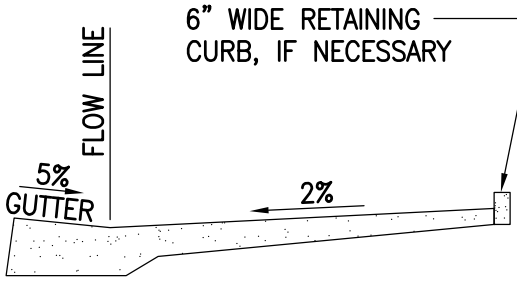

SECTION C–C

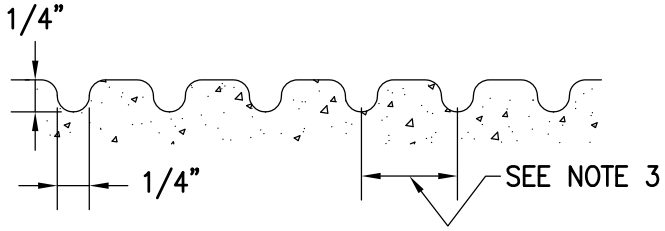

GROOVING DETAIL

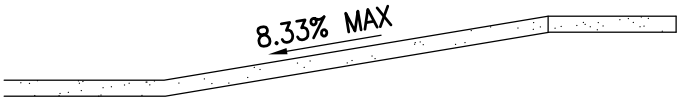

SECTION D–D

NOTES:

1. THE LOWER END OF EACH RAMP SHALL BE FLUSH WITH GUTTER.

2. WHEN THE RAMP IS LOCATED IN THE CENTER OF THE CURB RETURN, CROSS WALK CONFIGURATION MUST BE SIMILAR TO THAT SHOWN ON THE PLAN TO ACCOMODATE WHEELSCHAIRS.

3. THE RAMP SHALL HAVE A 12" WIDE BORDER WITH ¼" GROOVES APPROXIMATELY ¾" O.C. (SEE GROOVING DETAIL) AT LOCATIONS INDICATED ON THE PLANS. THE SURFACE OF THE RAMP SHALL HAVE A TRANSVERSE BROOMED SURFACE TEXTURE ROUGHER THAN THE SURROUNING SIDEWALK EXCEPT WHEN LOCATED IN THE CENTER OF CURB RETURN.

4. THE RAMPS SHALL HAVE TRUNCATED DOME TILES AS DETECTABLE WARNINGS AT THE END OF THE RUNNING SLOPE OF THE RAMP, AS INDICATED IN THE PLANS AND SPECIFICATIONS.

REVISIONS		CITY OF KINGSBURG	STD No.
FEB 09			
		CURB RAMP NOTES AND DETAILS	ST–30

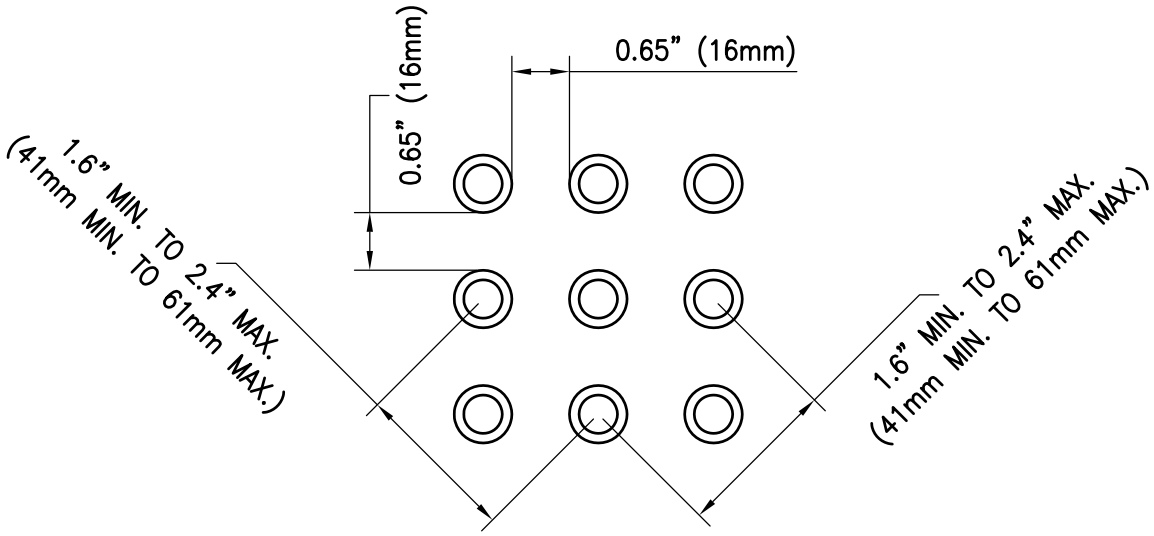

RAISED TRUNCATED
DOME PATTERN

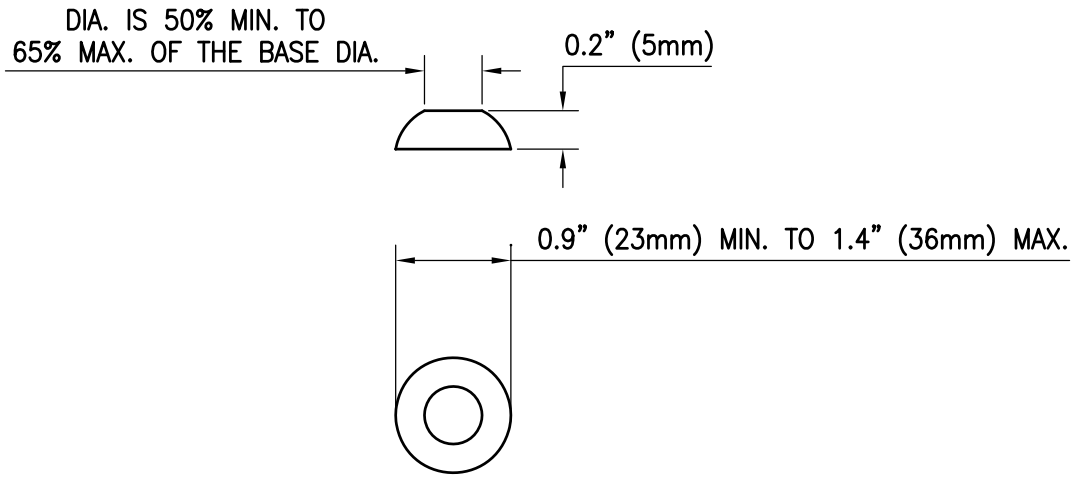

RAISED TRUNCATED DOME

DETECTABLE WARNING SURFACE

REVISIONS		CITY OF KINGSBURG	STD No.
FEB 09		DETECTABLE WARNING SERVICE	ST–31

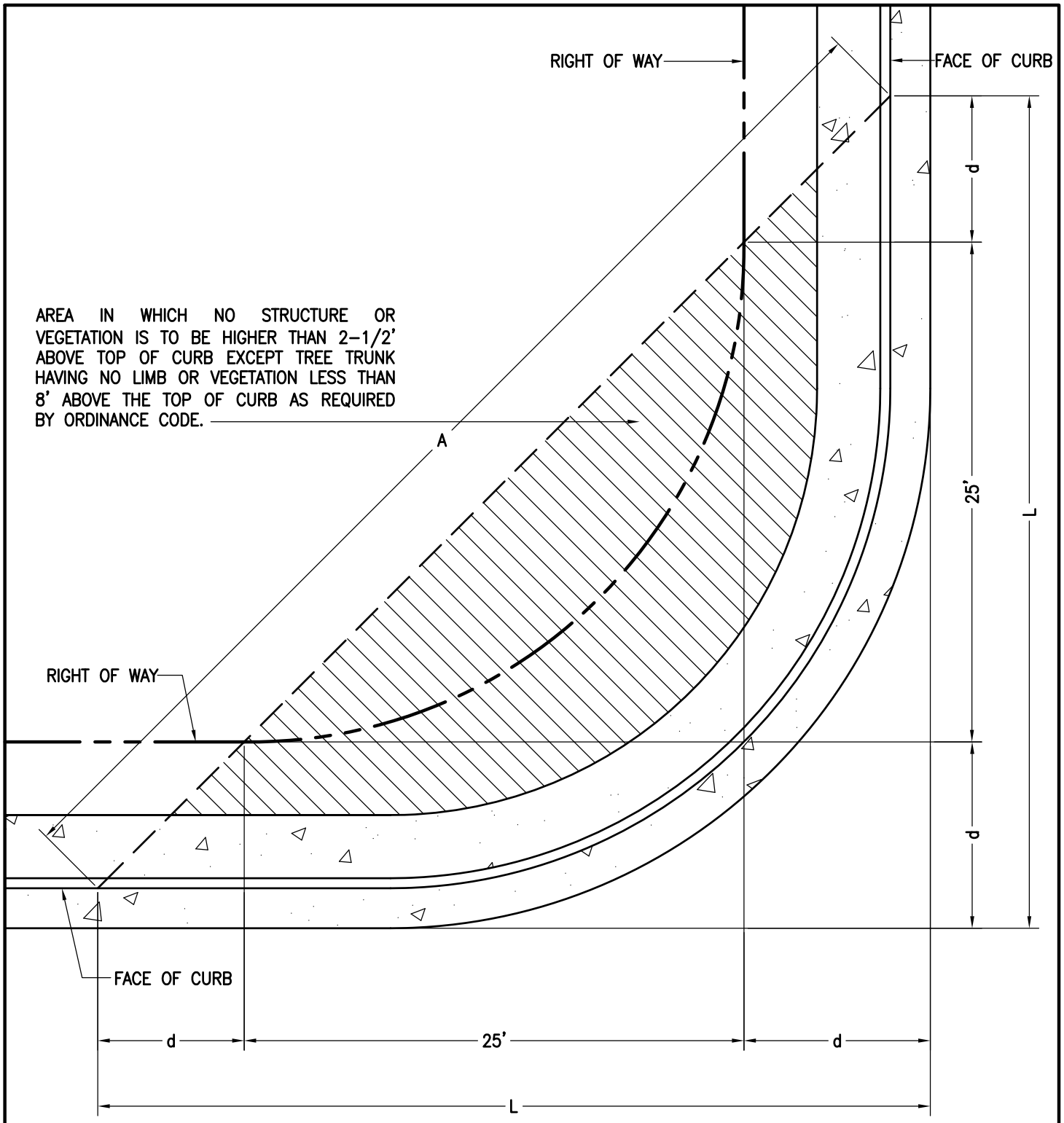

TOTAL DISTANCE (L) = 25 + 2d

EXAMPLE: L = 25' + 2(10') = 45'
A = 1.412 x L
A = 1.412 x 45' = 63.5'

REVISIONS		CITY OF KINGSBURG	STD No.
FEB 09		CLEAR VISION TRIANGLE AREA	ST-32

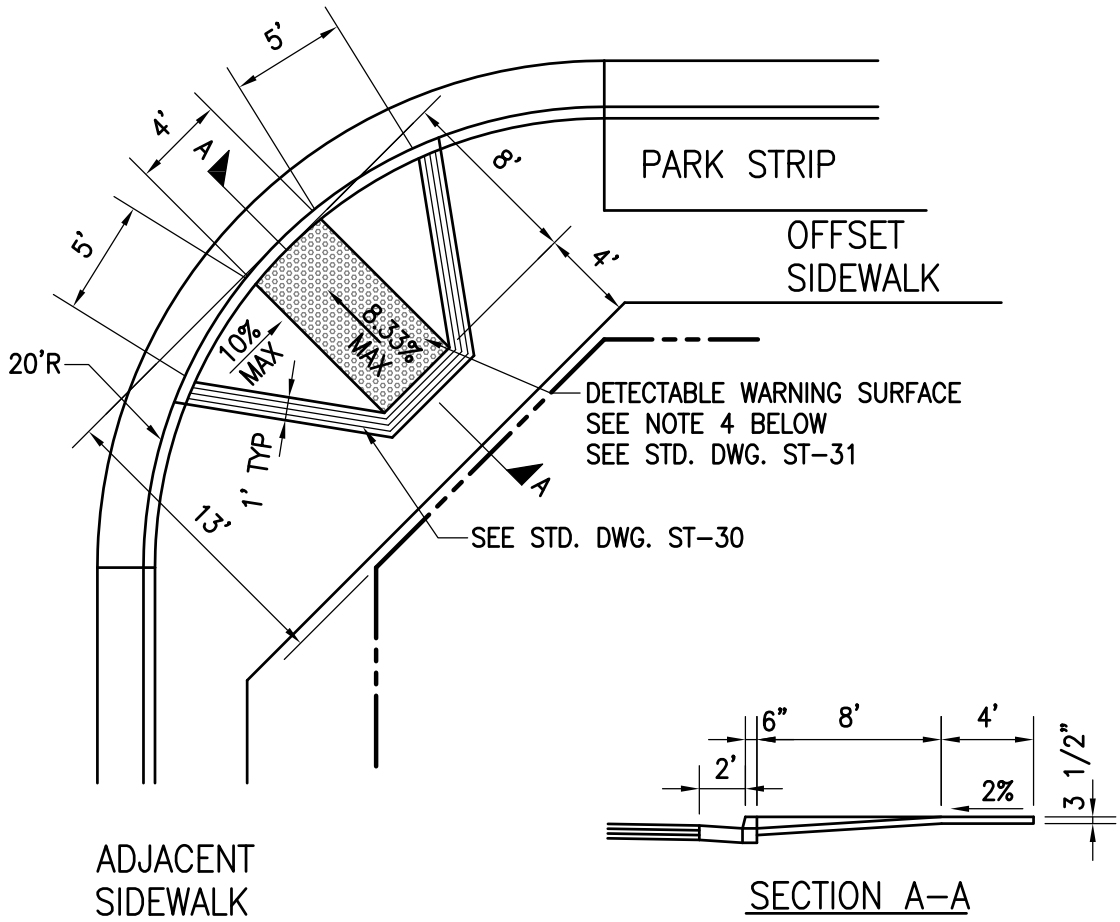

NOTES :

1. TRANSITIONS FROM RAMPS TO WALKS, GUTTERS OR STREETS SHALL BE FLUSH AND FREE OF ABRUPT CHANGES.
2. MAXIMUM SLOPES OF ADJOINING GUTTERS, THE ROAD SURFACE IMMEDIATELY ADJACENT TO THE CURB RAMP AND CONTINUOUS PASSAGE TO THE CURB RAMP SHALL NOT EXCEED 5 PERCENT WITHIN 4' OF THE TOP OR BOTTOM OF THE CURB RAMP.
3. SURFACE OF CURB RAMP AND FLARED SIDE SHALL HAVE BROOM FINISH TRANSVERSE WITH THE PATH OF TRAVEL AND SHALL BE OF CONTRASTING FINISH TO THAT OF ADJOINING SIDEWALK.
4. CURB RAMPS SHALL HAVE A DETECTABLE WARNING SURFACE THAT EXTENDS THE FULL WIDTH AND DEPTH OF THE CURB RAMP. DETECTABLE WARNING SURFACES SHALL CONFORM TO THE DETAILS ON THIS PLAN AND THE REQUIREMENTS ON STANDARD DRAWING ST-31.
5. THE EDGE OF THE DETECTABLE WARNING SURFACE NEAREST THE STREET SHALL BE BETWEEN 6" AND 8" FROM THE GUTTER FLOWLINE.
6. UTILITY PULL BOXES, MANHOLES, VAULTS AND ALL OTHER UTILITY FACILITIES WITHIN THE BOUNDARIES OF THE CURB RAMP WILL BE RELOCATED OR ADJUSTED TO GRADE BY THE OWNER PRIOR TO, OR IN CONJUNCTION WITH, CURB RAMP CONSTRUCTION.
7. THE DETECTABLE WARNING SHALL VISUALLY CONTRAST 70% WITH ADJOINING SURFACES, EITHER LIGHT-ON-DARK OR DARK-ON LIGHT. THE MATERIAL USED SHALL BE AN INTEGRAL PART OF THE WALKING SURFACE.
8. ONLY APPROVED DSA/AC DETECTABLE WARNING PRODUCTS AND DIRECTIONAL SURFACES SHALL BE INSTALLED AS PROVIDED IN THE CALIFORNIA CODE OF REGULATIONS (CCR), TITLE 24, PART 1, ARTICLES 2, 3, AND 4. REFER TO CCR TITLE 24, PART 12, CHAPTER 12-11A AND B FOR BUILDING FACILITY ACCESS SPECIFICATIONS FOR PRODUCT APPROVAL FOR DETECTABLE WARNING PRODUCTS AND DIRECTIONAL SURFACES.

REVISIONS		CITY OF KINGSBURG	STD No.
FEB 09			
		CURB RAMP CASE A	ST-33

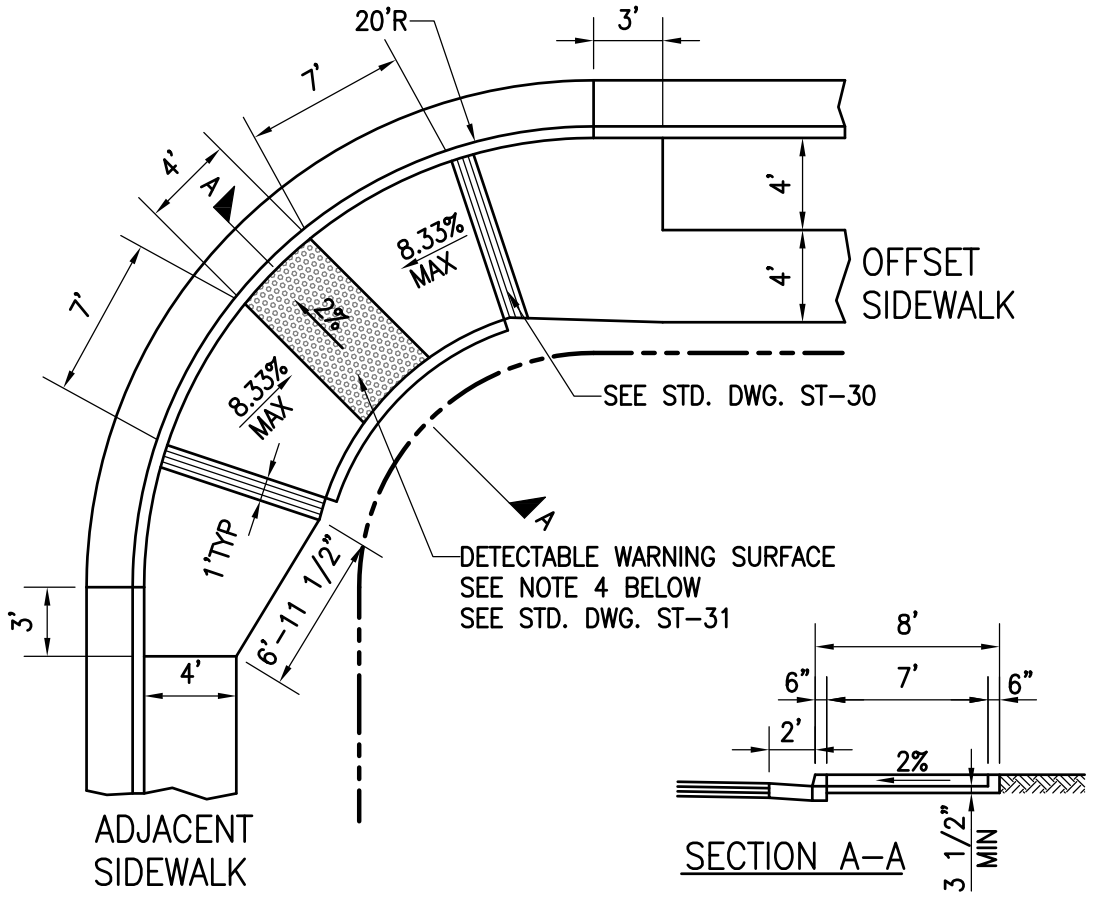

NOTES :

1. TRANSITIONS FROM RAMPS TO WALKS, GUTTERS OR STREETS SHALL BE FLUSH AND FREE OF ABRUPT CHANGES.
2. MAXIMUM SLOPES OF ADJOINING GUTTERS, THE ROAD SURFACE IMMEDIATELY ADJACENT TO THE CURB RAMP AND CONTINUOUS PASSAGE TO THE CURB RAMP SHALL NOT EXCEED 5 PERCENT WITHIN 4' OF THE TOP OR BOTTOM OF THE CURB RAMP.
3. SURFACE OF CURB RAMP AND FLARED SIDE SHALL HAVE BROOM FINISH TRANSVERSE WITH THE PATH OF TRAVEL AND SHALL BE OF CONTRASTING FINISH TO THAT OF ADJOINING SIDEWALK.
4. CURB RAMPS SHALL HAVE A DETECTABLE WARNING SURFACE THAT EXTENDS THE FULL WIDTH AND DEPTH OF THE CURB RAMP. DETECTABLE WARNING SURFACES SHALL CONFORM TO THE DETAILS ON THIS PLAN AND THE REQUIREMENTS ON STANDARD DRAWING ST-31.
5. THE EDGE OF THE DETECTABLE WARNING SURFACE NEAREST THE STREET SHALL BE BETWEEN 6" AND 8" FROM THE GUTTER FLOWLINE.
6. UTILITY PULL BOXES, MANHOLES, VAULTS AND ALL OTHER UTILITY FACILITIES WITHIN THE BOUNDARIES OF THE CURB RAMP WILL BE RELOCATED OR ADJUSTED TO GRADE BY THE OWNER PRIOR TO, OR IN CONJUNCTION WITH, CURB RAMP CONSTRUCTION.
7. THE DETECTABLE WARNING SHALL VISUALLY CONTRAST 70% WITH ADJOINING SURFACES, EITHER LIGHT-ON-DARK OR DARK-ON LIGHT. THE MATERIAL USED SHALL BE AN INTEGRAL PART OF THE WALKING SURFACE.
8. ONLY APPROVED DSA/AC DETECTABLE WARNING PRODUCTS AND DIRECTIONAL SURFACES SHALL BE INSTALLED AS PROVIDED IN THE CALIFORNIA CODE OF REGULATIONS (CCR), TITLE 24, PART 1, ARTICLES 2, 3, AND 4. REFER TO CCR TITLE 24, PART 12, CHAPTER 12-11A AND B FOR BUILDING FACILITY ACCESS SPECIFICATIONS FOR PRODUCT APPROVAL FOR DETECTABLE WARNING PRODUCTS AND DIRECTIONAL SURFACES.

REVISIONS		CITY OF KINGSBURG	STD No.
FEB 09		CURB RAMP CASE B	ST-34

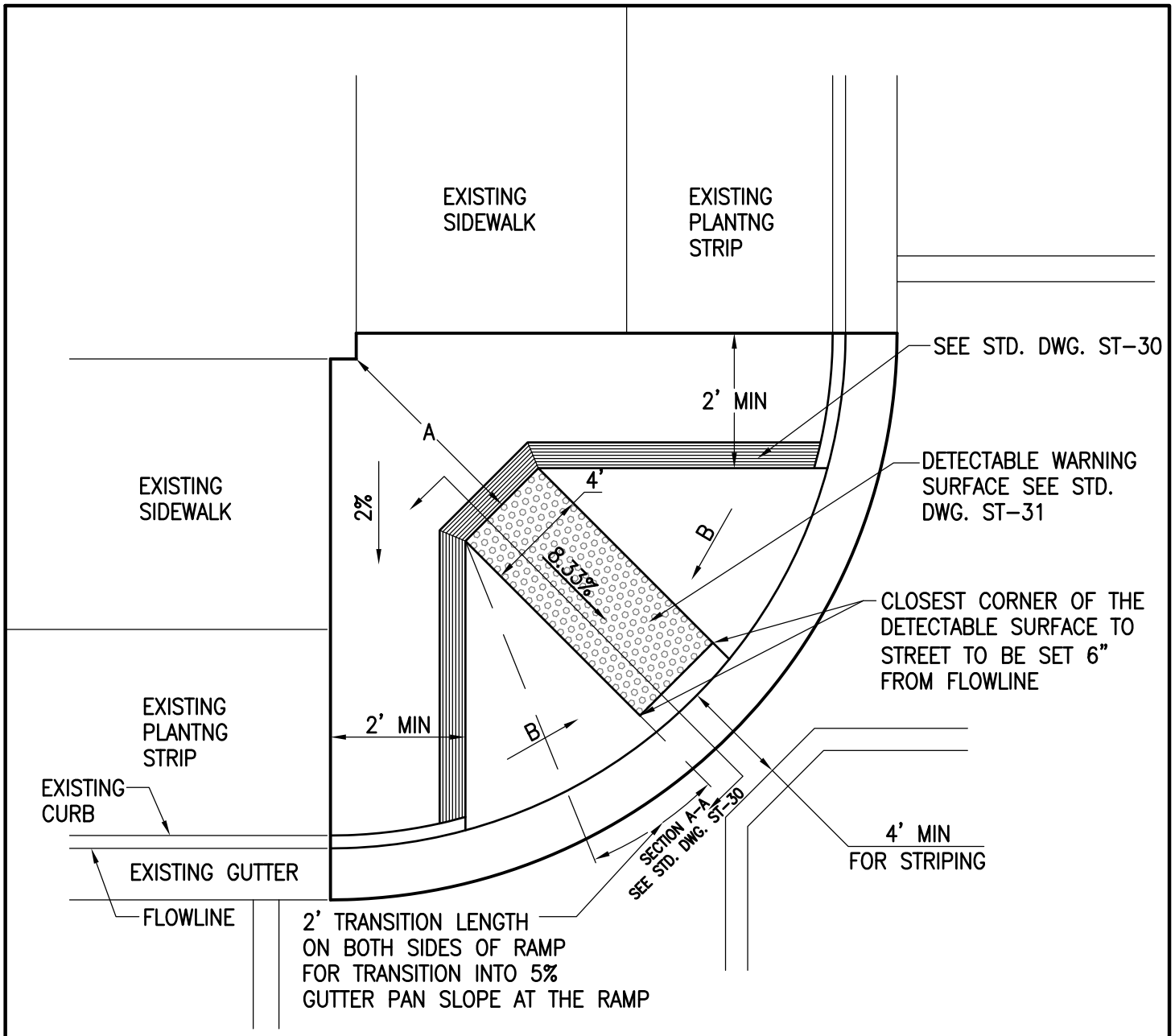

FLARED SIDE SHALL BE TRANSVERSE BROOMED TEXTURE ROUGHER THAN SURROUNDING SIDEWALK

NOTES: (SLOPES)

1. 2% IS 1 IN 50
2. 5% IS 1 IN 20
3. 8.33% IS 1 IN 12
4. 10% IS 1 IN 10

DRAWING NOT TO SCALE

IF "A" IS:	THEN "B" FOR THE FLARED SIDE SHALL BE:
4' OR GREATER	10% MAX
3' TO LESS THAN 4'	8.33% MAX

REVISIONS	
FEB 09	

CITY OF KINGSBURG

CURB RAMP
CASE C

STD No.
ST-35

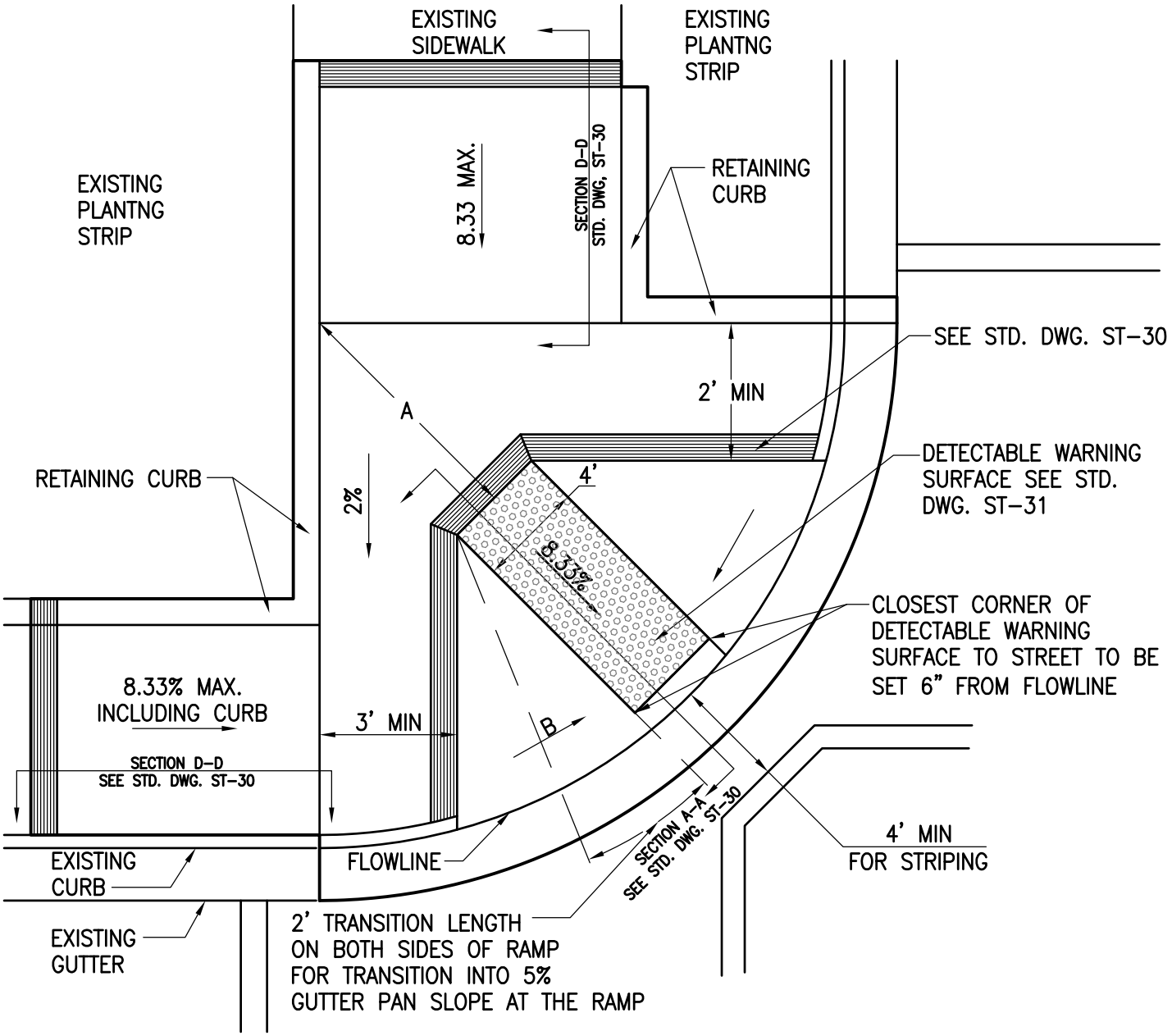

CROSSWALK

FLARED SIDE SHALL BE TRANSVERSE BROOMED TEXTURE ROUGHER THAN SURROUNDING SIDEWALK

NOTES: (SLOPES)

1. 2% IS 1 IN 50
2. 5% IS 1 IN 20
3. 8.33% IS 1 IN 12
4. 10% IS 1 IN 10

DRAWING NOT TO SCALE

IF "A" IS:	THEN "B" FOR THE FLARED SIDE SHALL BE:
4' OR GREATER	10% MAX
3' TO LESS THAN 4'	8.33% MAX

REVISIONS	
FEB 09	

CITY OF KINGSBURG

CURB RAMP
CASE D

STD No.
ST–36

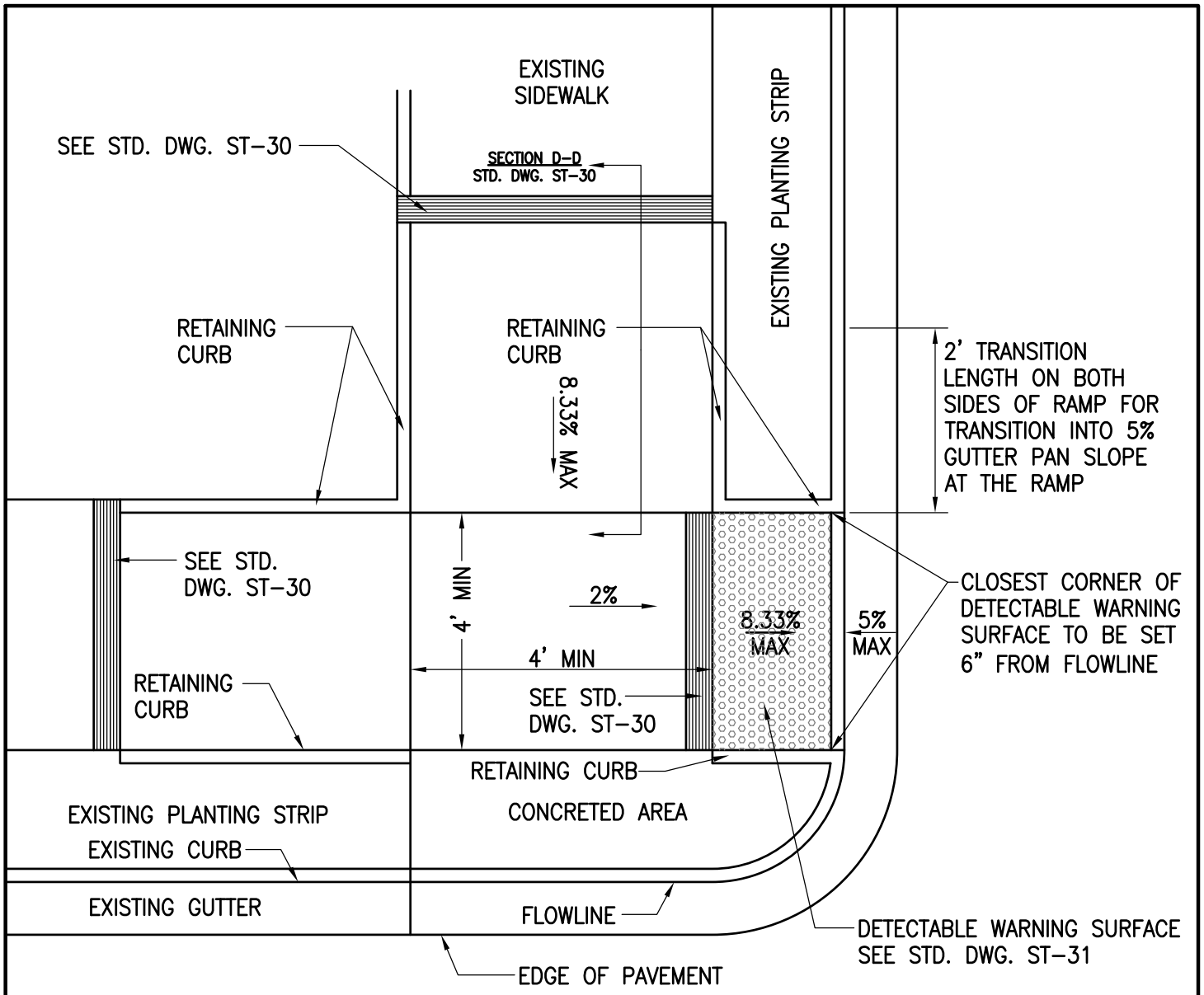

FLARED SIDE SHALL BE TRANSVERSE BROOMED TEXTURE ROUGHER THAN SURROUNDING SIDEWALK

NOTES: (SLOPES)

1. 2% IS 1 IN 50
2. 5% IS 1 IN 20
3. 8.33% IS 1 IN 12
4. 10% IS 1 IN 10

DRAWING NOT TO SCALE

IF "A" IS:	THEN "B" FOR THE FLARED SIDE SHALL BE:
4' OR GREATER	10% MAX
3' TO LESS THAN 4'	8.33% MAX

REVISIONS	
FEB 09	

CITY OF KINGSBURG

CURB RAMP
CASE E

STD No.
ST-37

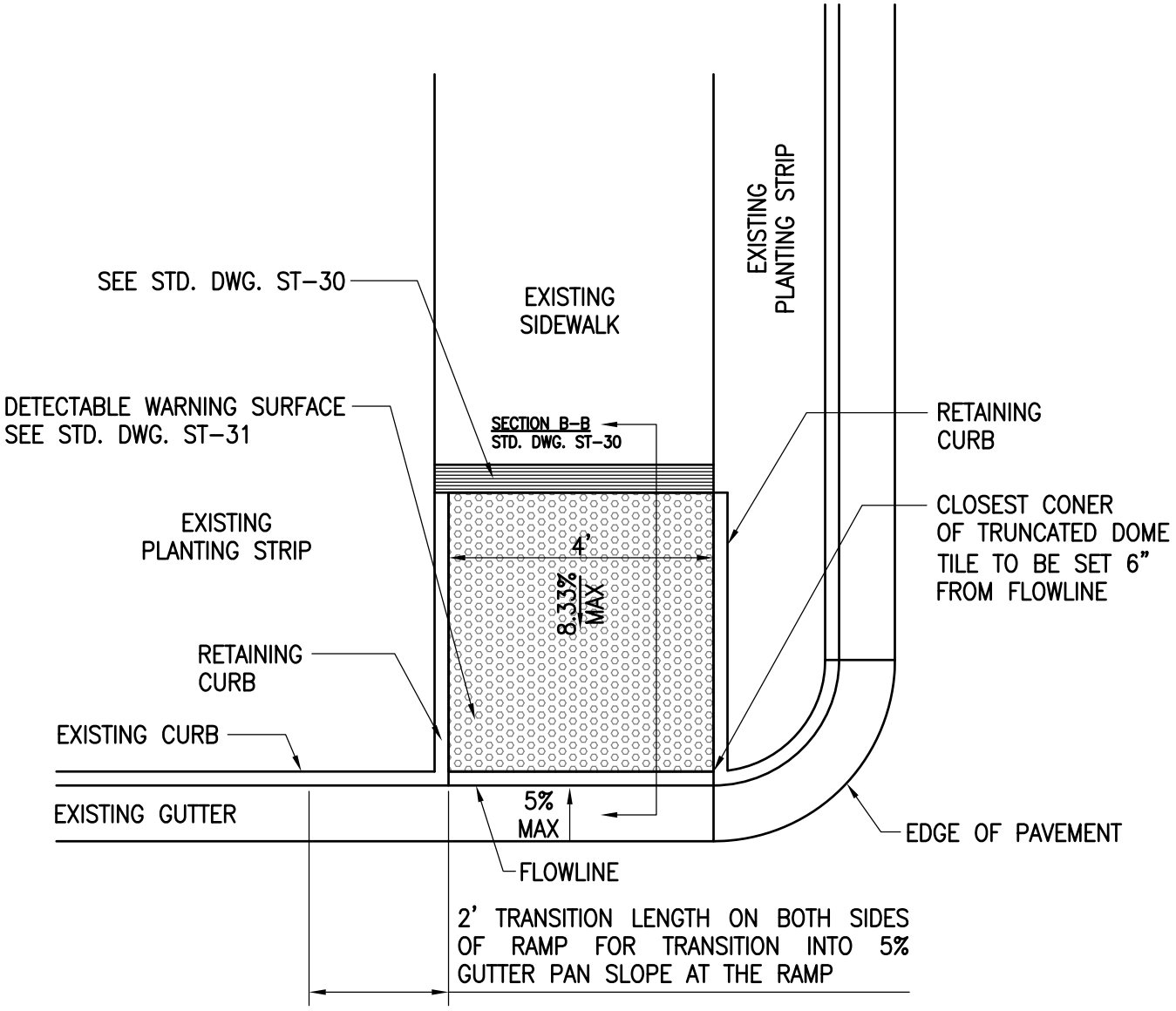

NOTES: (SLOPES)

DRAWING NOT TO SCALE

1. 2% IS 1 IN 50
2. 5% IS 1 IN 20
3. 8.33% IS 1 IN 12
4. 10% IS 1 IN 10

REVISIONS		CITY OF KINGSBURG	STD No.
FEB 09		CURB RAMP CASE F	ST-38

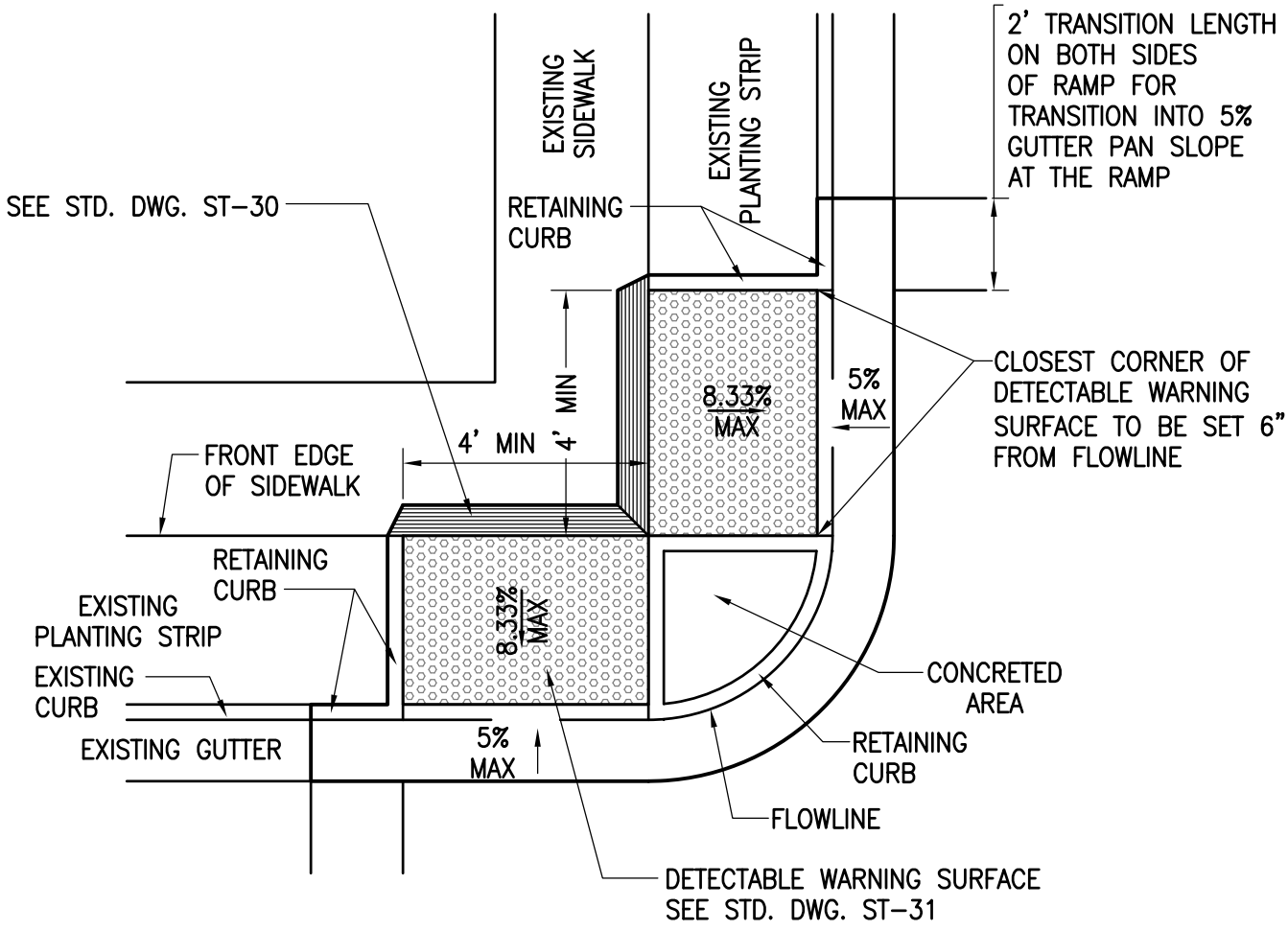

NOTES: (SLOPES)

1. 2% IS 1 IN 50
2. 5% IS 1 IN 20
3. 8.33% IS 1 IN 12
4. 10% IS 1 IN 10

DRAWING NOT TO SCALE

REVISIONS		CITY OF KINGSBURG	STD No.
FEB 09		CURB RAMP CASE G	ST-39

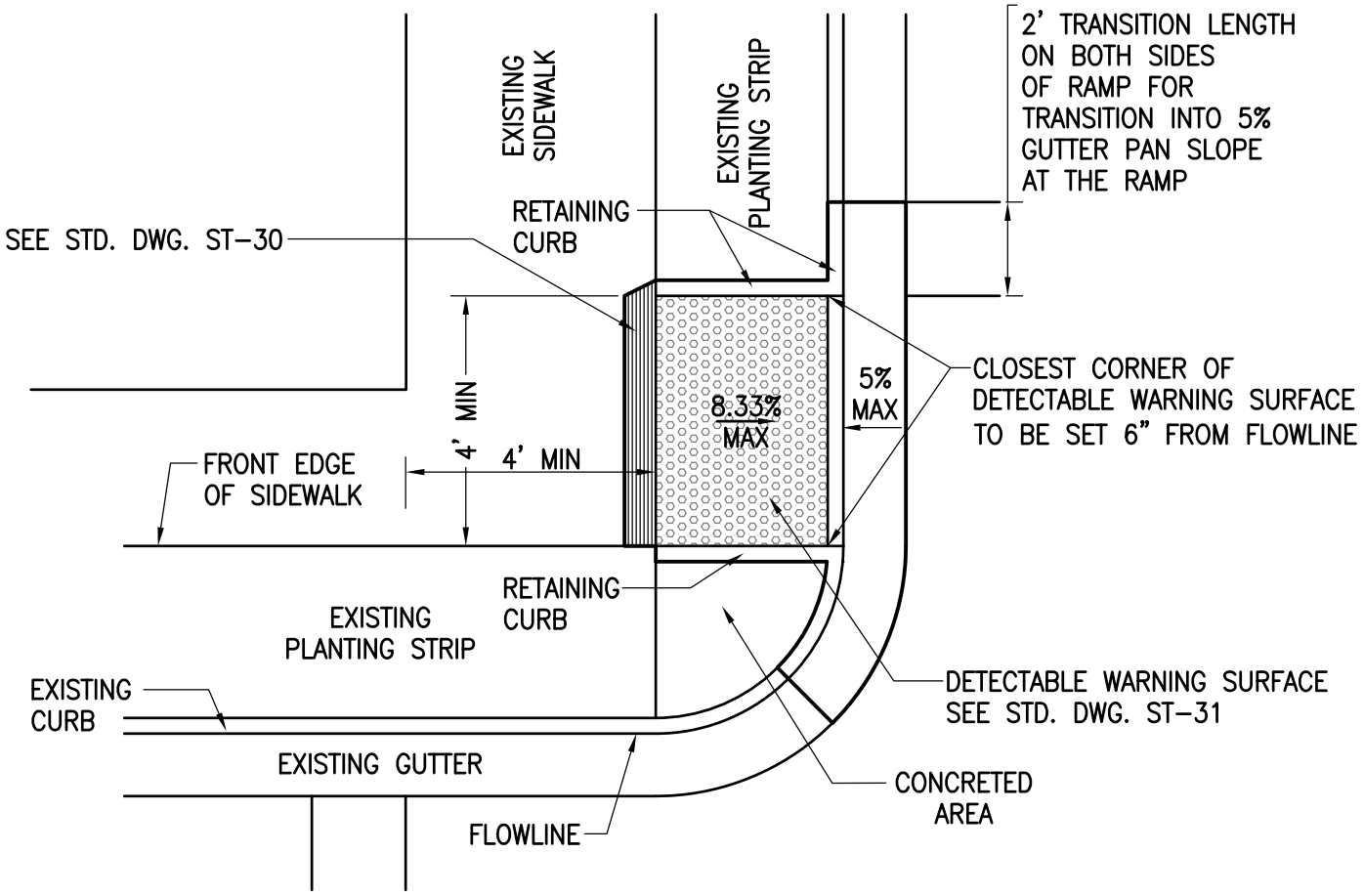

NOTES: (SLOPES)

1. 2% IS 1 IN 50
2. 5% IS 1 IN 20
3. 8.33% IS 1 IN 12
4. 10% IS 1 IN 10

DRAWING NOT TO SCALE

REVISIONS		CITY OF KINGSBURG	STD No.
FEB 09		CURB RAMP CASE H	ST-40

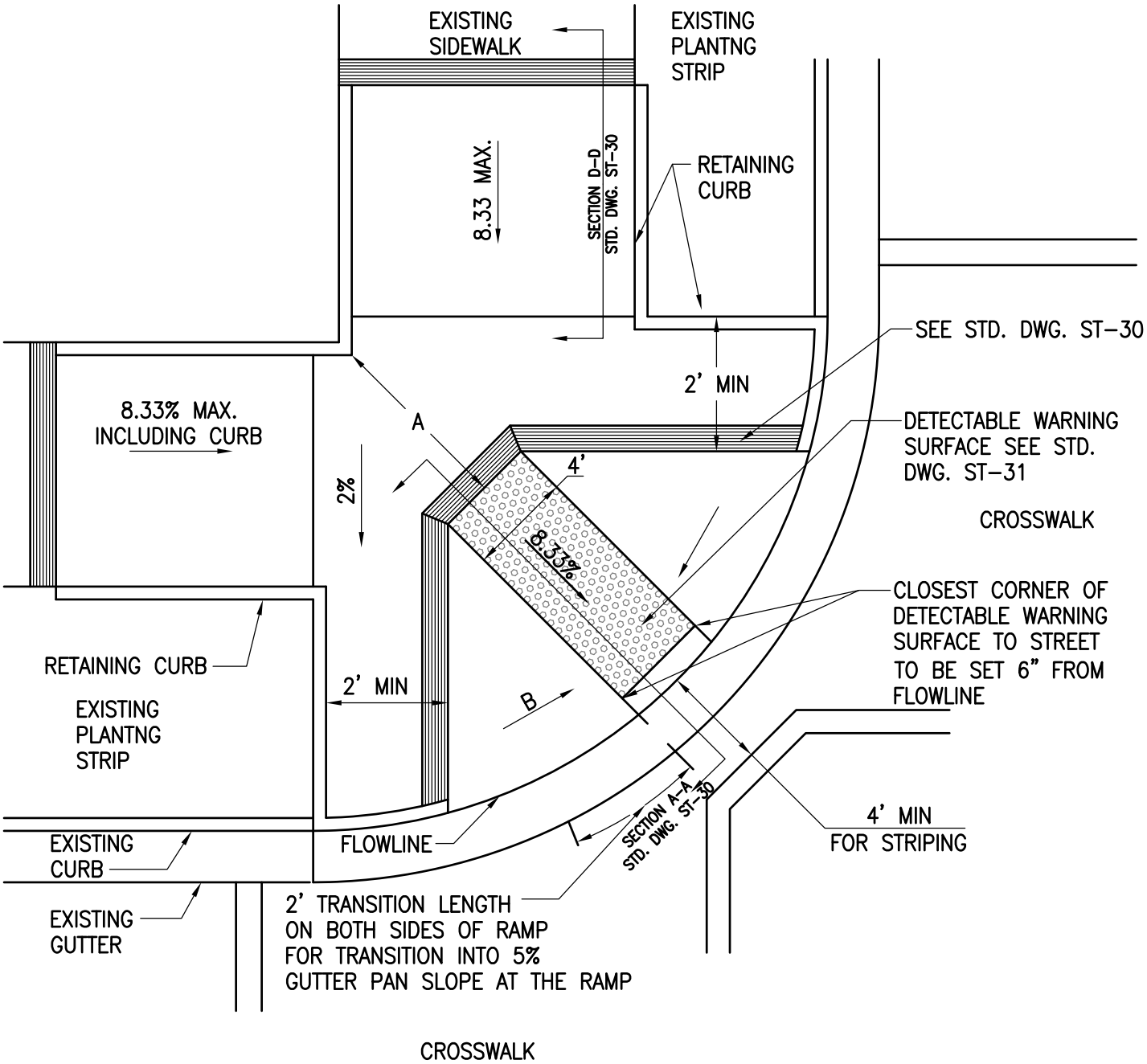

FLARED SIDE SHALL BE TRANSVERSE BROOMED TEXTURE ROUGHER THAN SURROUNDING SIDEWALK

NOTES: (SLOPES)

1. 2% IS 1 IN 50
2. 5% IS 1 IN 20
3. 8.33% IS 1 IN 12
4. 10% IS 1 IN 10

DRAWING NOT TO SCALE

IF "A" IS:	THEN "B" FOR THE FLARED SIDE SHALL BE:
4' OR GREATER	10% MAX
3' TO LESS THAN 4'	8.33% MAX

REVISIONS	
FEB 09	

CITY OF KINGSBURG

CURB RAMP
CASE I

STD No.
ST–41

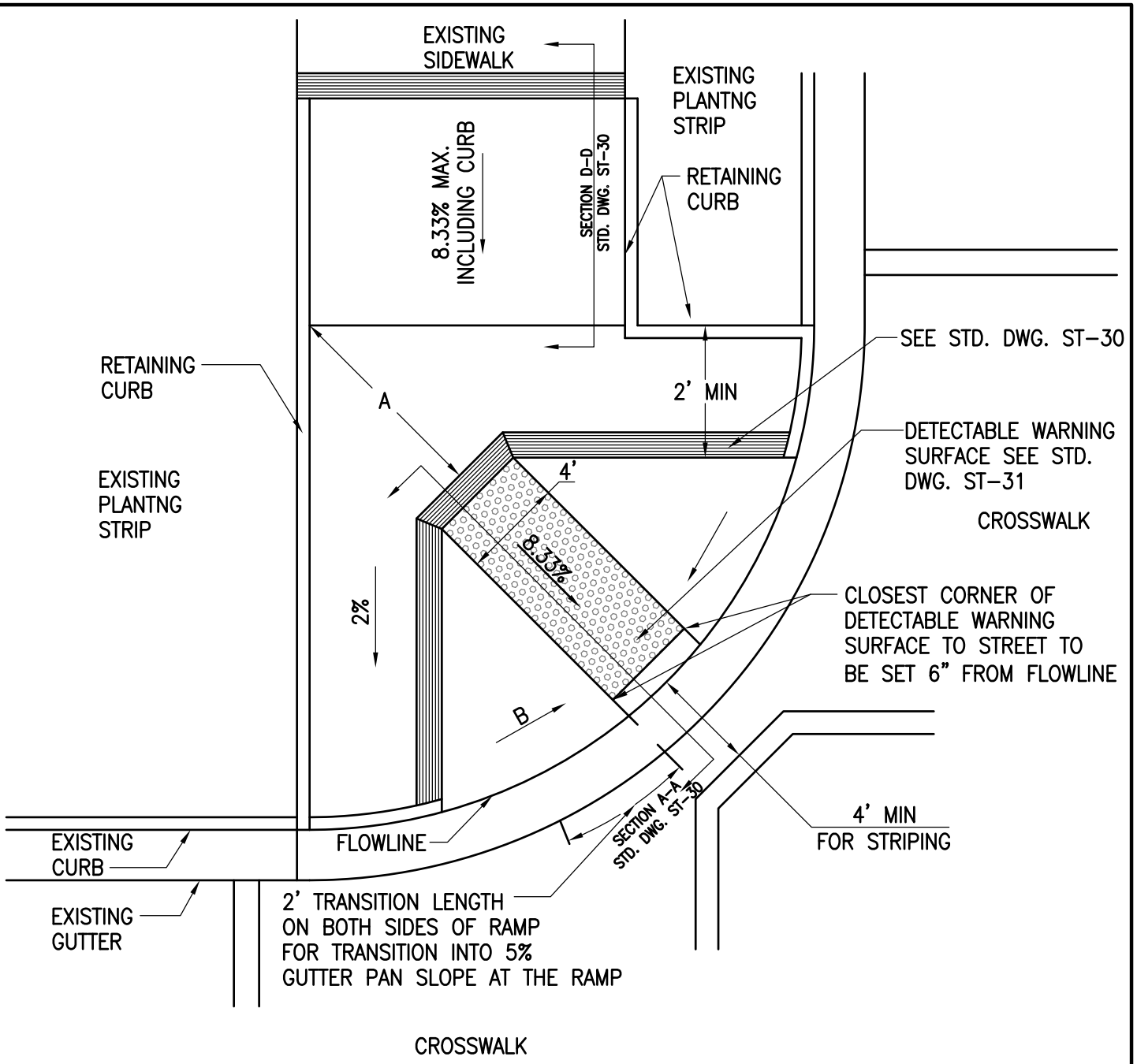

FLARED SIDE SHALL BE TRANSVERSE BROOMED TEXTURE ROUGHER THAN SURROUNDING SIDEWALK

NOTES: (SLOPES)

1. 2% IS 1 IN 50
2. 5% IS 1 IN 20
3. 8.33% IS 1 IN 12
4. 10% IS 1 IN 10

DRAWING NOT TO SCALE

IF "A" IS:	THEN "B" FOR THE FLARED SIDE SHALL BE:
4' OR GREATER	10% MAX
3' TO LESS THAN 4'	8.33% MAX

REVISIONS	
FEB 09	

CITY OF KINGSBURG

CURB RAMP
CASE J

STD No.
ST-42

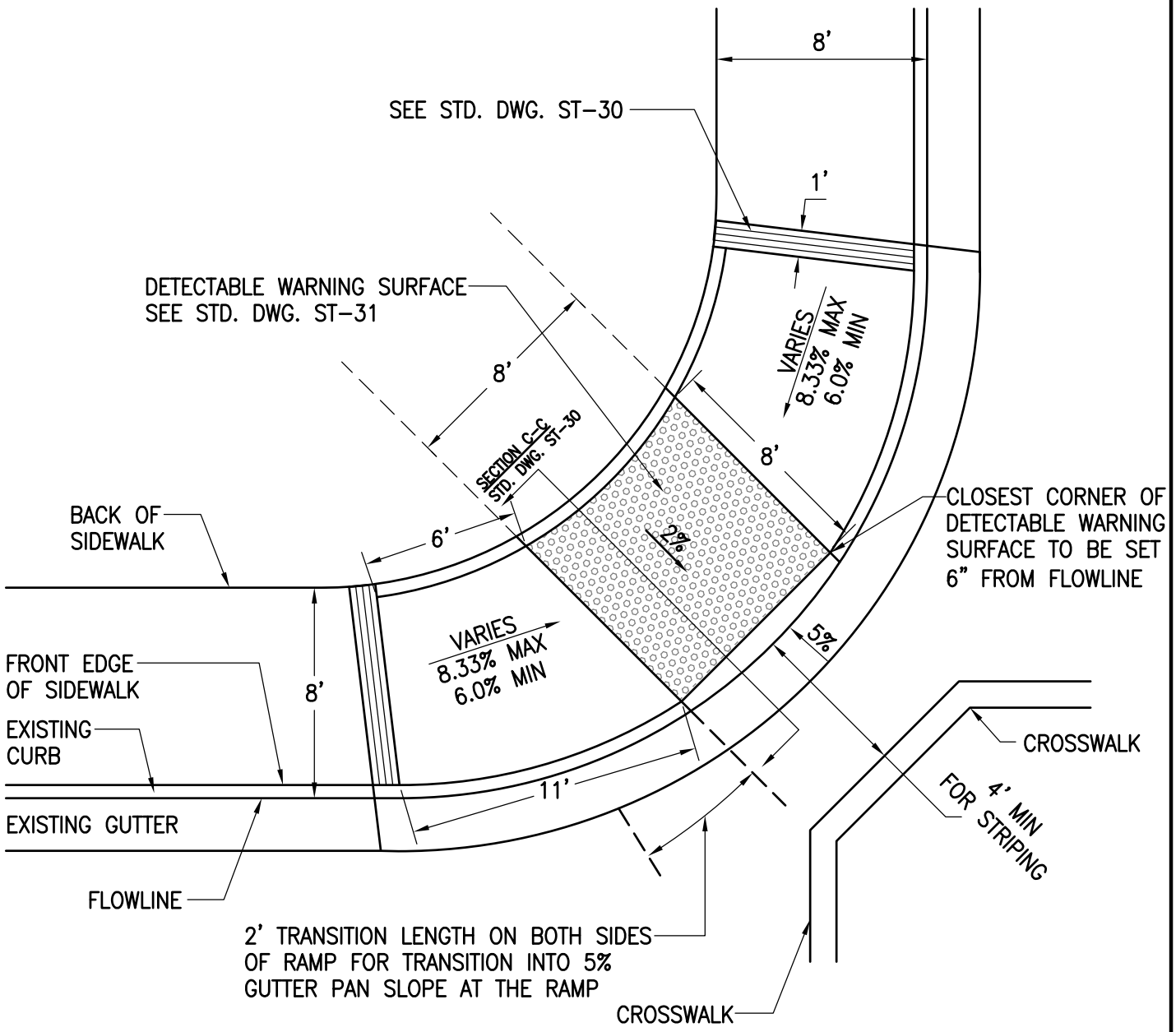

NOTES: (SLOPES)

1. 2% IS 1 IN 50
2. 5% IS 1 IN 20
3. 8.33% IS 1 IN 12
4. 10% IS 1 IN 10

DRAWING NOT TO SCALE

REVISIONS		CITY OF KINGSBURG	STD No.
FEB 09		CURB RAMP CASE K	ST-43

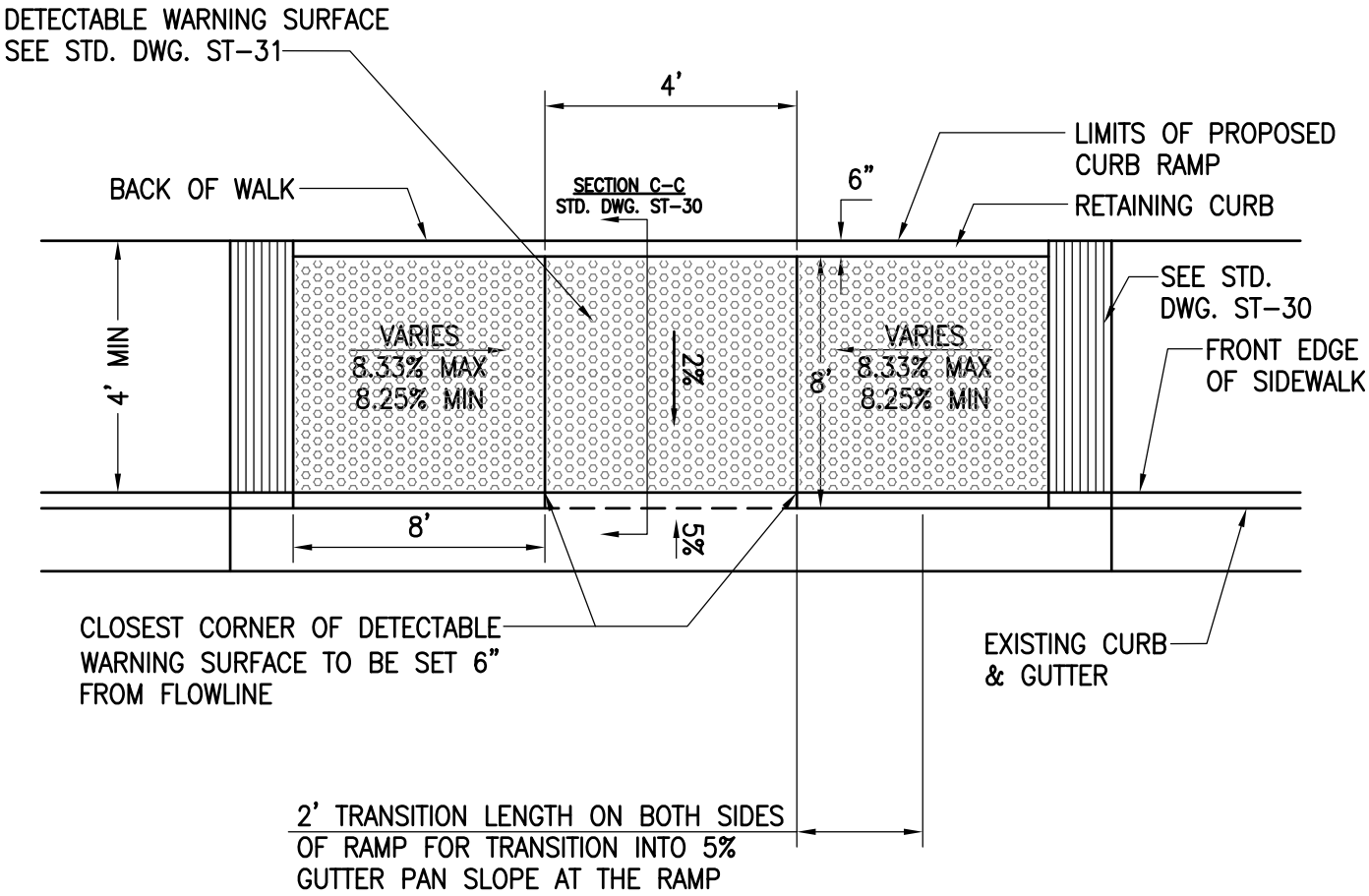

NOTES: (SLOPES)

1. 2% IS 1 IN 50
2. 5% IS 1 IN 20
3. 8.33% IS 1 IN 12
4. 10% IS 1 IN 10

DRAWING NOT TO SCALE

REVISIONS		CITY OF KINGSBURG	STD No.
FEB 09		CURB RAMP CASE L	ST-44

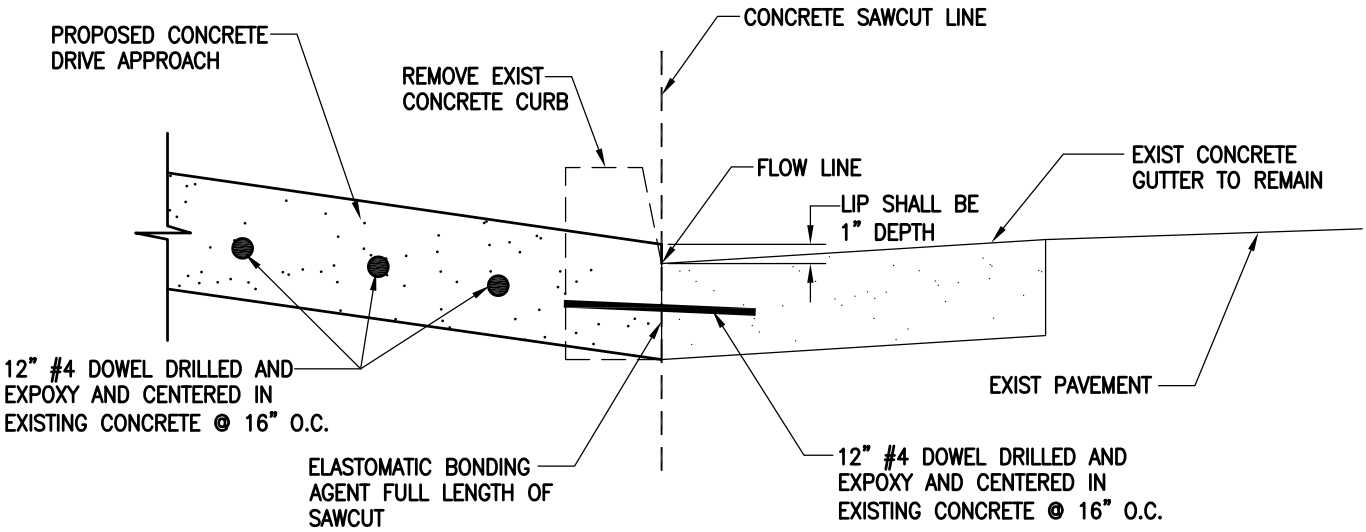

PROFILE
NTS

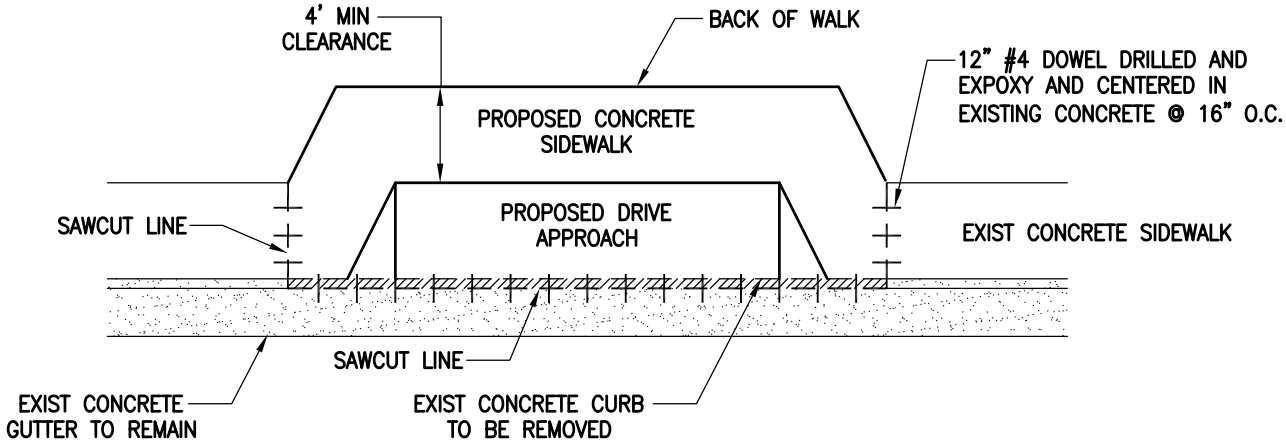

PLAN
NTS

REVISIONS		CITY OF KINGSBURG	STD No.
FEB 09		CONCRETE DRIVE WAY CUT–IN DETAIL	ST–45

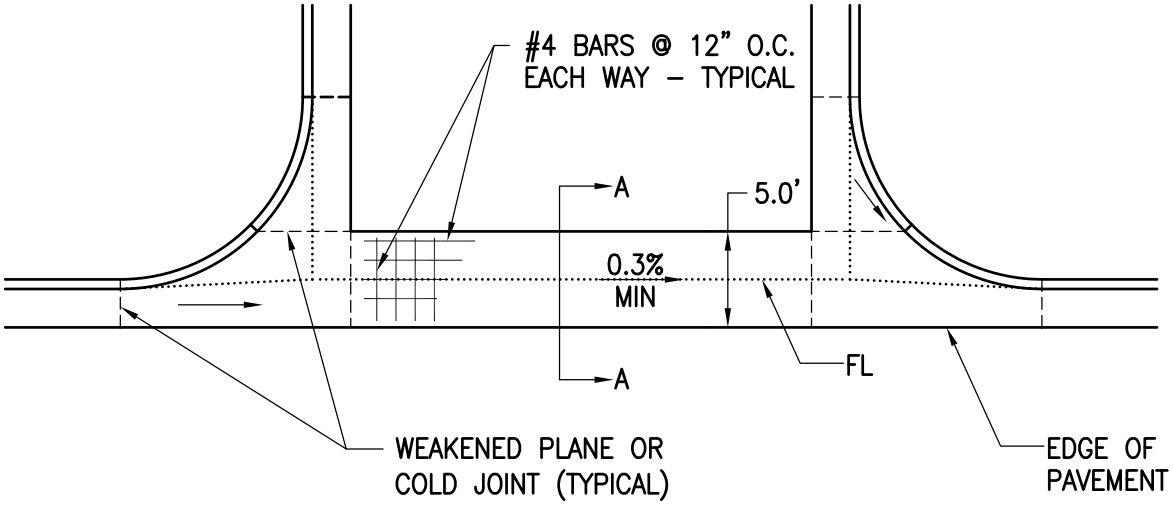

PLAN VIEW

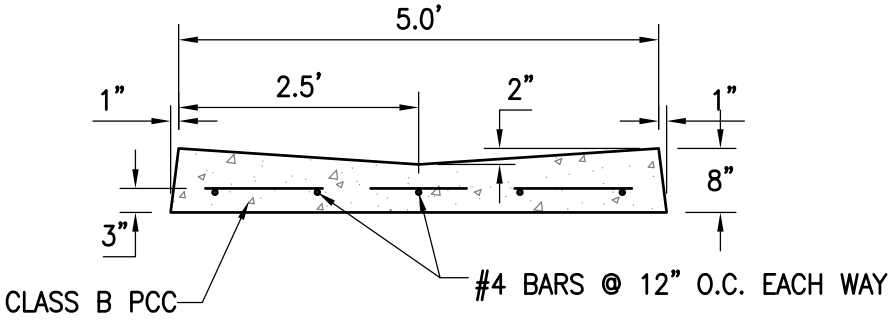

SECTION A–A

NOTES:

1. ADDITIONAL WEAKENED PLANE JOINTS IN ACCORDANCE WITH THE CITY OF KINGSBURG STANDARD SPECIFICATION SECTION 11.

2. IF APPROVED BY THE CITY ENGINEER, VALLEY GUTTER MAY BE USED IN IN–FILL AREAS.

3. VALLEY GUTTERS WILL NOT BE APPROVED ACROSS STREETS IN NEWLY DEVELOPED AREAS, EXCEPT CUL–DE–SACS.

4. CONSTRUCT CURB RAMPS PER CITY OF KINGSBURG STANDARDS OR AS APPROVED BY THE CITY ENGINEER.

5. SPECIFY CURB RADIUS AS REQUIRED BY APPLICABLE STANDARD DETAILS FOR STREET DESIGN, OR AS REQUIRED BY CITY ENGINEER.

REVISIONS		CITY OF KINGSBURG	STD No.
FEB 09		VALLEY GUTTER	ST–46

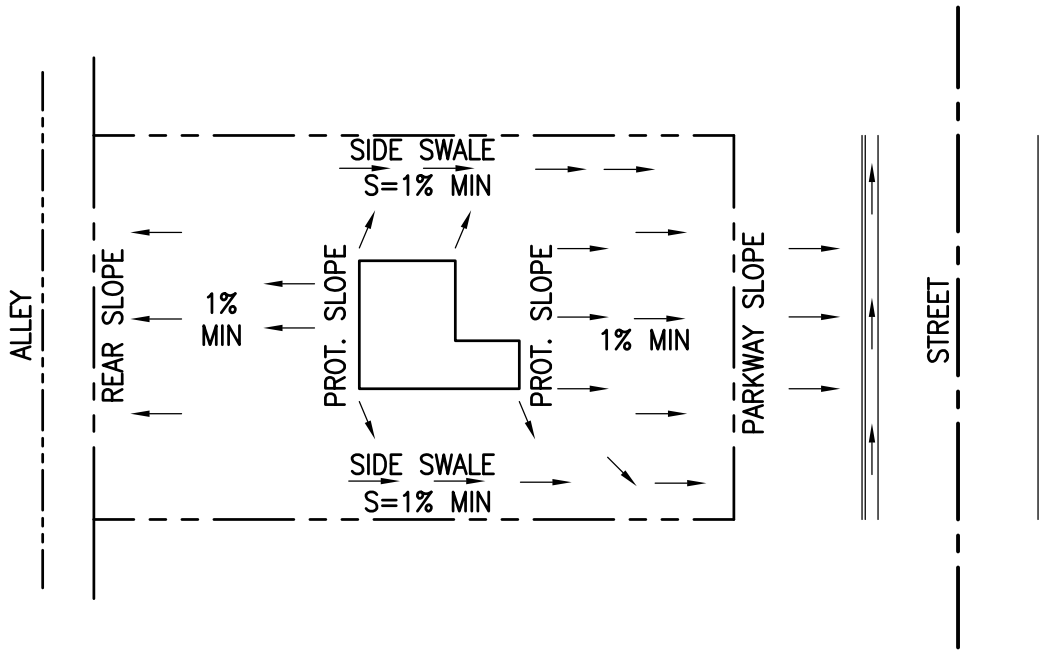

LEGEND:

← DIRECTION OF SURFACE FLOW.

PROT. PROTECTIVE

GENERAL NOTES:

1. FINISHED GRADING SHALL BE COMPLETED BY OTHERS AFTER HOUSE CONSTRUCTION.
2. PAD ELEVATIONS ARE DESIGNED FOR 12" SLAB & BASE ROCK FOUNDATION SECTIONS OR AS RECOMMENDED BY A LICENSED GEOTECHNICAL ENGINEER.
3. PAD ELEVATIONS ARE DESIGNED SUCH THAT THE PAD ELEVATION SPECIFIED WILL ACCOMODATE REAR AND SIDE SWALES TO BE GRADED AT A MINIMUM GRADIENT OF 1% IN ACCORDANCE WITH CITY OF KINGSBURG STANDARDS.
4. ACTUAL LOT GRADING IS TO BE DESIGNED WITH HOUSE PLOT PLAN AND MAY VARY FROM THIS TYPICAL DETAIL DEPENDING ON HOW THE HOUSE IS PLOTTED.
5. FINAL TOP OF FOUNDATION ELEVATION SHALL BE A MINIMUM OF 8" ABOVE PROTECTIVE SLOPE

REVISIONS		CITY OF KINGSBURG	STD No.
FEB 09		TYPICAL FINISHED LOT GRADING	ST-47

UTILITIES

U-1 Trench Backfill Existing Streets
U-2 Standard Locations for Residential
U-3 Street Cross Sectional Typical

SECTION

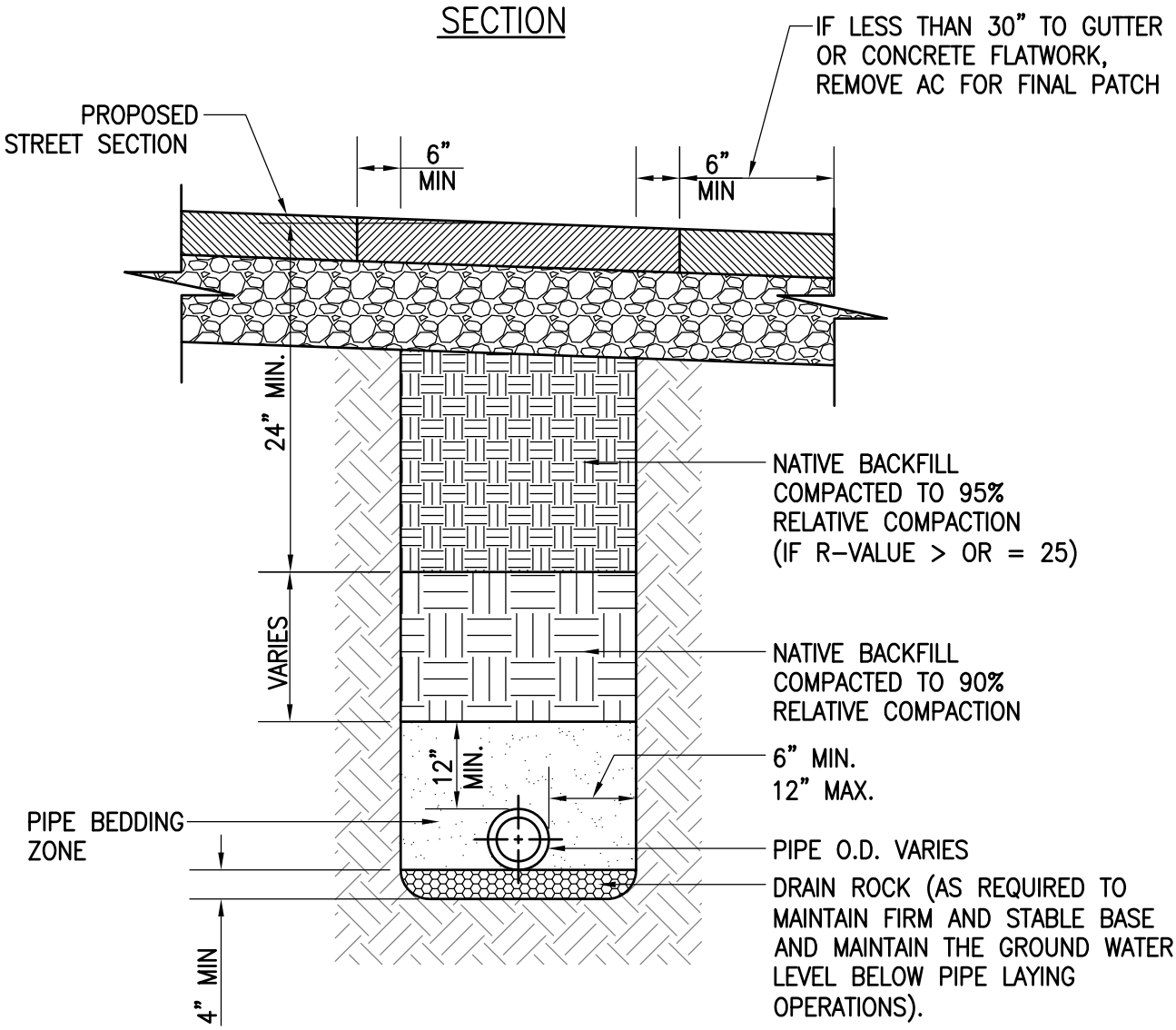

NOTE:

1. TRENCH SECTION SHALL BE BACKFILLED AND MECHANICALLY COMPACTED TO GRADE.

2. THE CLEAR WIDTH OF THE TRENCH SHALL BE A MAXIMUM OF THE PIPE O.D. PLUS 2 FEET. IF THE MAXIMUM TRENCH WIDTH MUST BE EXCEEDED OR IF THE PIPE IS INSTALLED IN A COMPACTED EMBANKMENT, THEN EMBEDMENT SHALL BE COMPACTED TO A POINT OF AT LEAST 2½ PIPE DIAMETERS FROM THE PIPE ON BOTH SIDES OF THE PIPE OR TO THE TRENCH WALLS, WHICHEVER IS LESS.

3. IN LANDSCAPED AREAS, THE NATIVE BACKFILL SHALL BE COMPACTED TO 85% RELATIVE COMPACTION.

REVISIONS		CITY OF KINGSBURG	STD No.
FEB 09		TRENCH BACKFILL EXISTING STREETS	UT-1

NOTES:

1. WATER AND SEWER SERVICES SHALL BE ON OPPOSITE SIDE OF LOT FROM THE ON-SITE PUBLIC UTILITY TRENCH.
2. WATER AND SEWER SERVICES SHALL NOT BE LOCATED IN THE DRIVEWAY.
3. STREET LIGHTS, BLOWOFFS, SAMPLING STATIONS AND FIRE HYDRANTS SHALL BE LOCATED WITHIN 3' OF LANE LINES.
4. CATCH BASINS SHALL BE ON OR VERY CLOSE TO LOT LINES AND OUT OF DRIVEWAYS (CB'S MUST HAVE 10' OF VERTICAL CURB-3' TRANSITIONS AND 4' FOR THE HOOD).
5. CITY OF KINGSBURG PUBLIC WORKS DEPARTMENT SHALL INSPECT WATER AND SKF SHALL INSPECT SEWER LOCATIONS PRIOR TO ROUGH PLUMBING SIGN OFF FROM BUILDING DEPARTMENT.

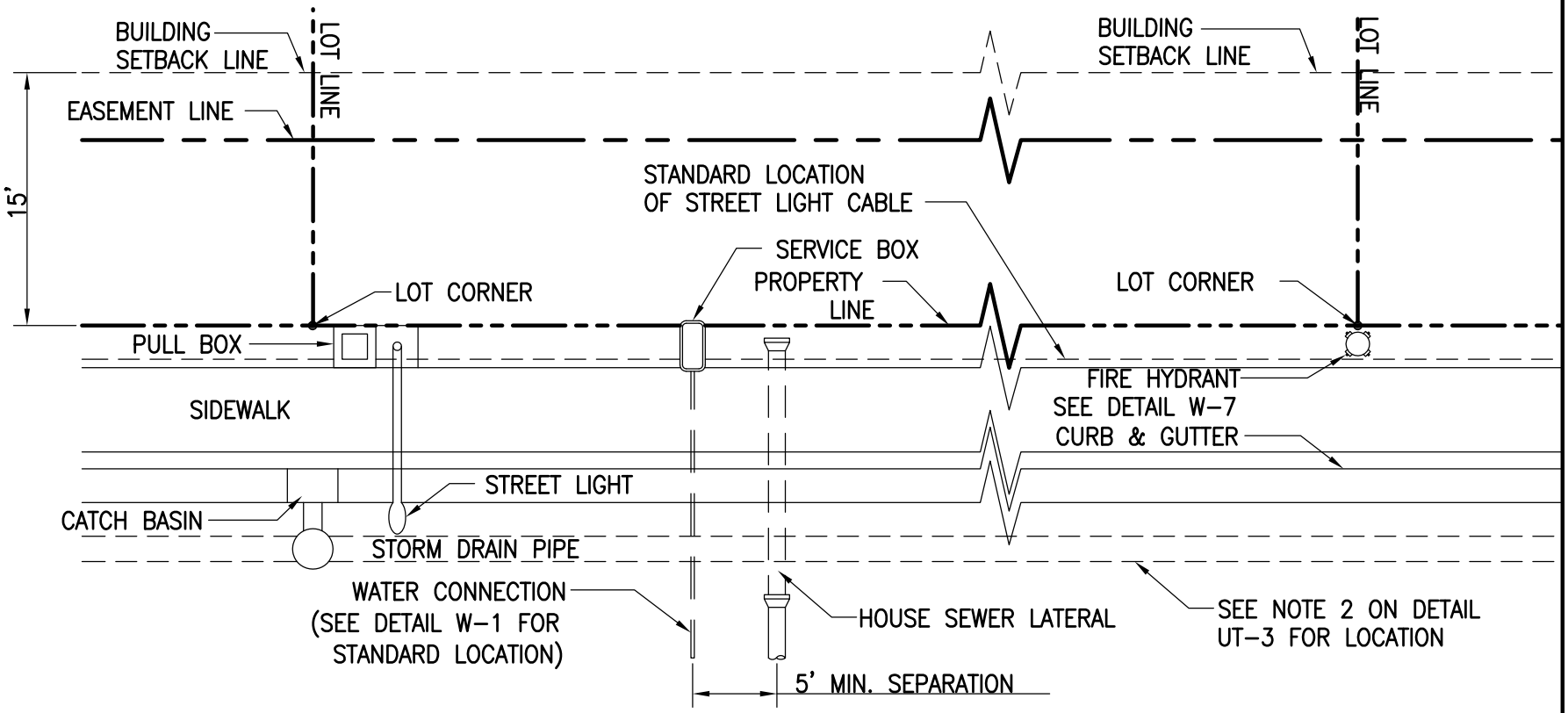

PLAN LAYOUT

REVISIONS	
FEB 09	

CITY OF KINGSBURG

STANDARD LOCATIONS FOR RESIDENTIAL

STD No. UT-2

NOTES:

1. FOR INDUSTRIAL SECTIONS, DEPTH OF SERVICES AT PROPERTY LINE SHALL BE DETERMINED BY INDIVIDUAL SEWER AND STORM DRAIN DESIGN.
2. STORM DRAIN PIPE SHALL BE 9-FT AWAY FROM FACE OF CURB IN RESIDENTIAL STREETS, 10-FT AWAY FROM FACE OF CURB IN ARTERIAL & COLLECTOR STREETS.
3. PREVIOUS INSTALLATIONS REQUIRE SEWER TO BE ON CENTERLINE AND WATER TO BE 10-FT NORTH OR EAST OF CENTERLINE. IN FILL AREAS WITH NO POSITIVE STORM DRAIN, PIPE SHOULD FOLLOW THE OLD STANDARD LOCATION.
4. JOINT TRENCH MAY BE ON EITHER SIDE OF THE STREET AT APPROXIMATELY 8-FT BEHIND PROPERTY LINE.
5. REPAIR SPLICES AND NEW CABLE FRANCHISES PLACED IN EXISTING ROADWAYS ARE 18-INCH OUT FROM THE LIP OF GUTTER.

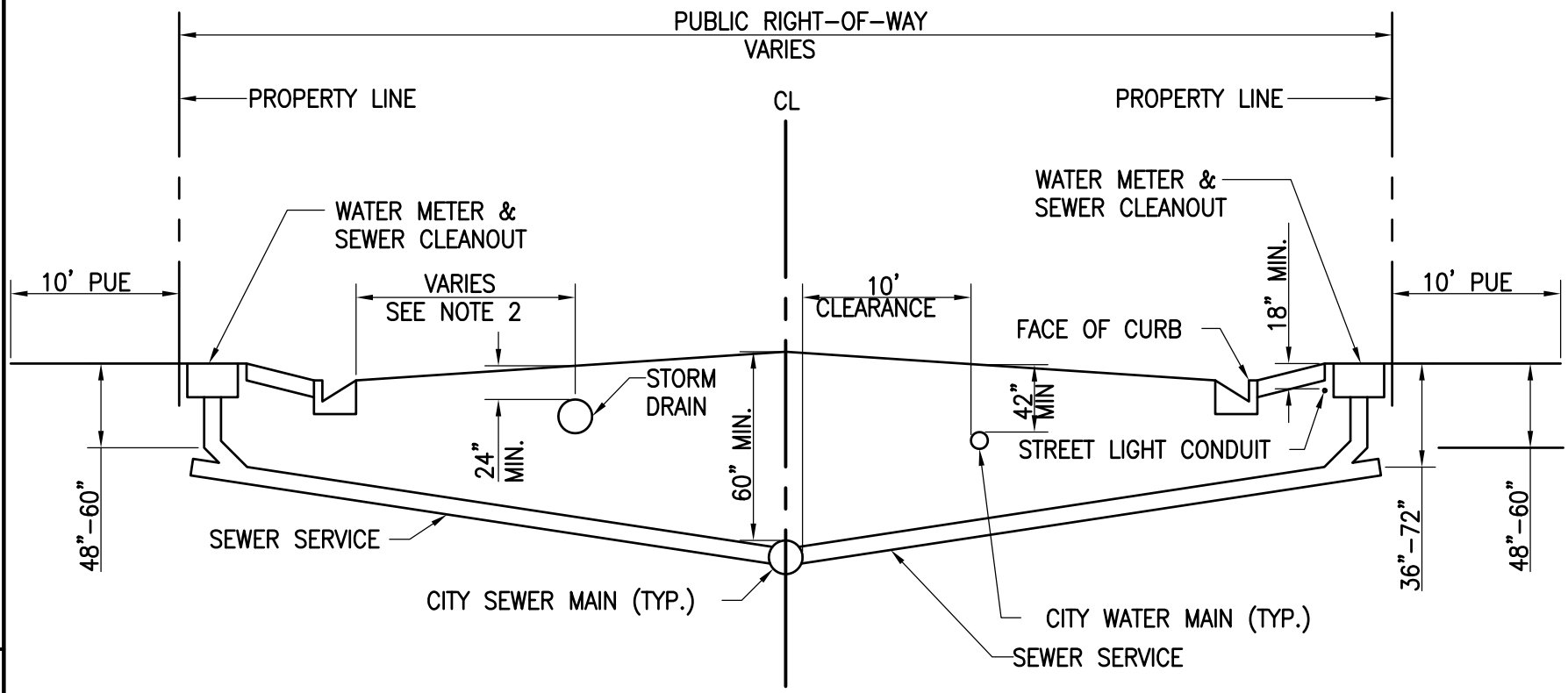

TYPICAL SECTION

REVISIONS

FEB 09

CITY OF KINGSBURG

STREET CROSS
SECTIONAL TYPICAL

STD
No.
UT-3

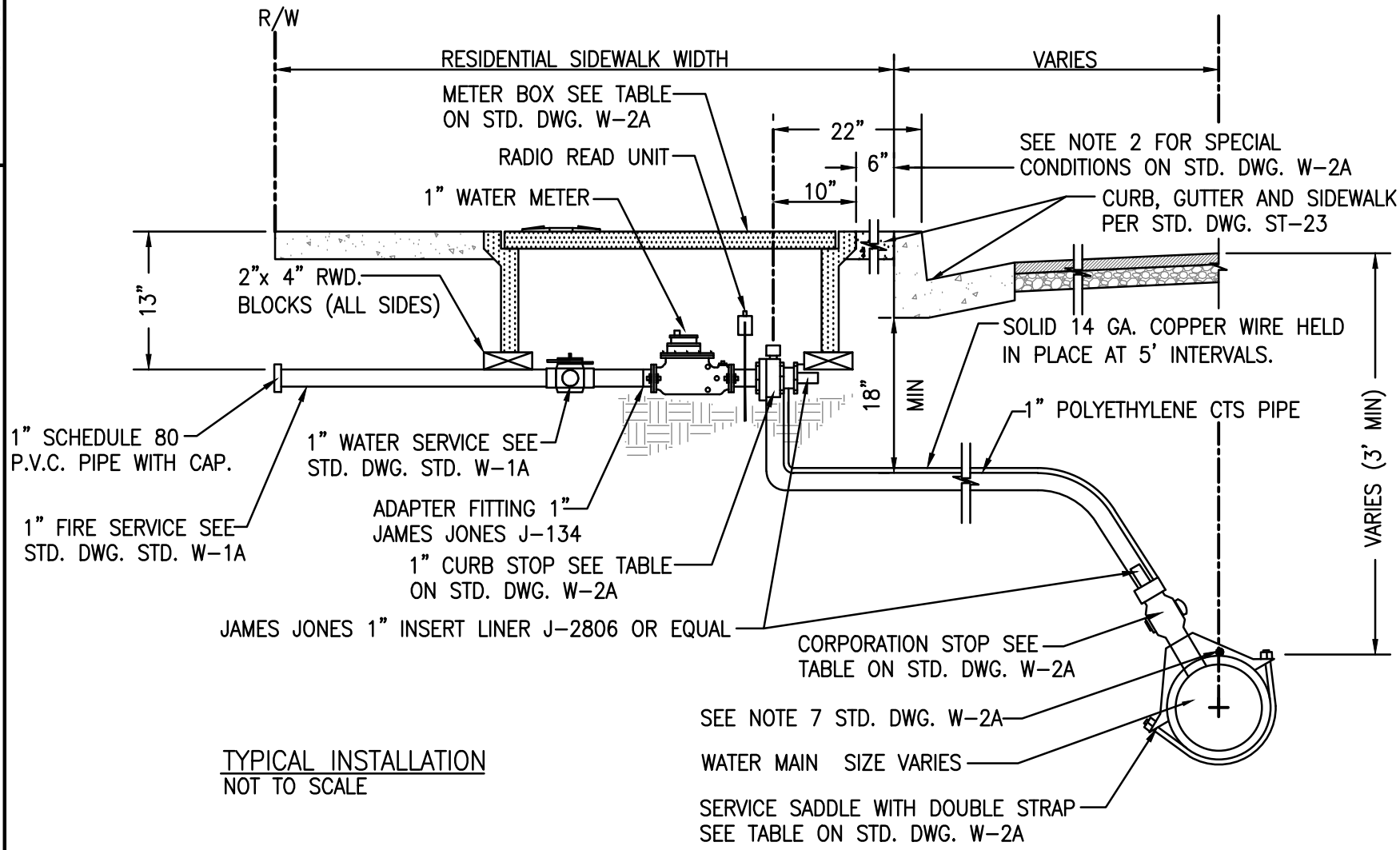

TYPICAL INSTALLATION
NOT TO SCALE

NOTE

1. FOR ADDITIONAL INFORMATION AND SPECIFICATIONS SEE STANDARD DRAWING W-2A.

REVISIONS
FEB 2012

CITY OF KINGSBURG

1-INCH WATER SERVICE ASSEMBLY

STD No. W-1

LEGEND:

GALVANIZED STEEL PIPE

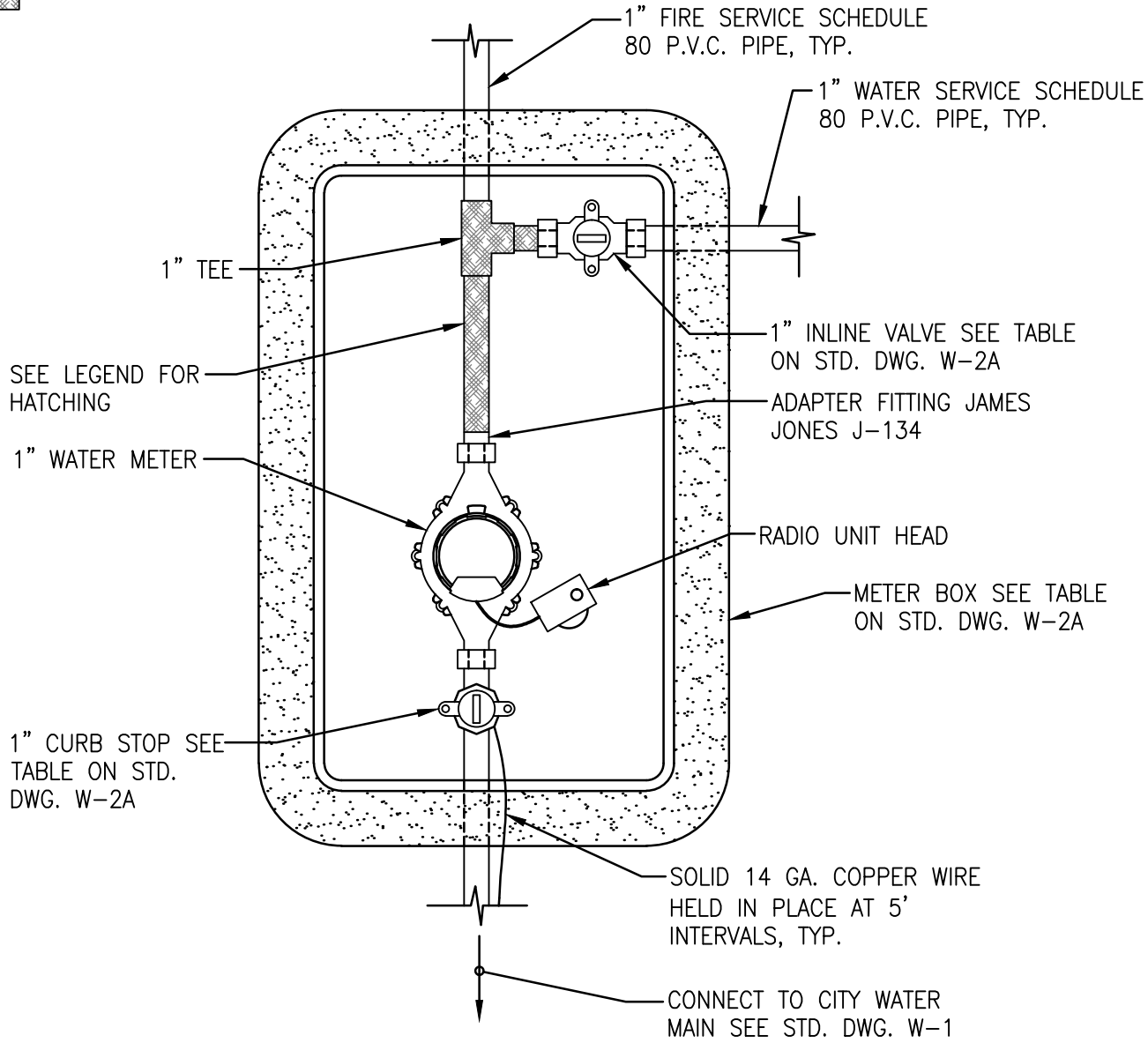

TYPICAL INSTALLATION

NOT TO SCALE

REVISIONS		CITY OF KINGSBURG	STD No.
FEB 2012		1-INCH WATER SERVICE ASSEMBLY	W-1A

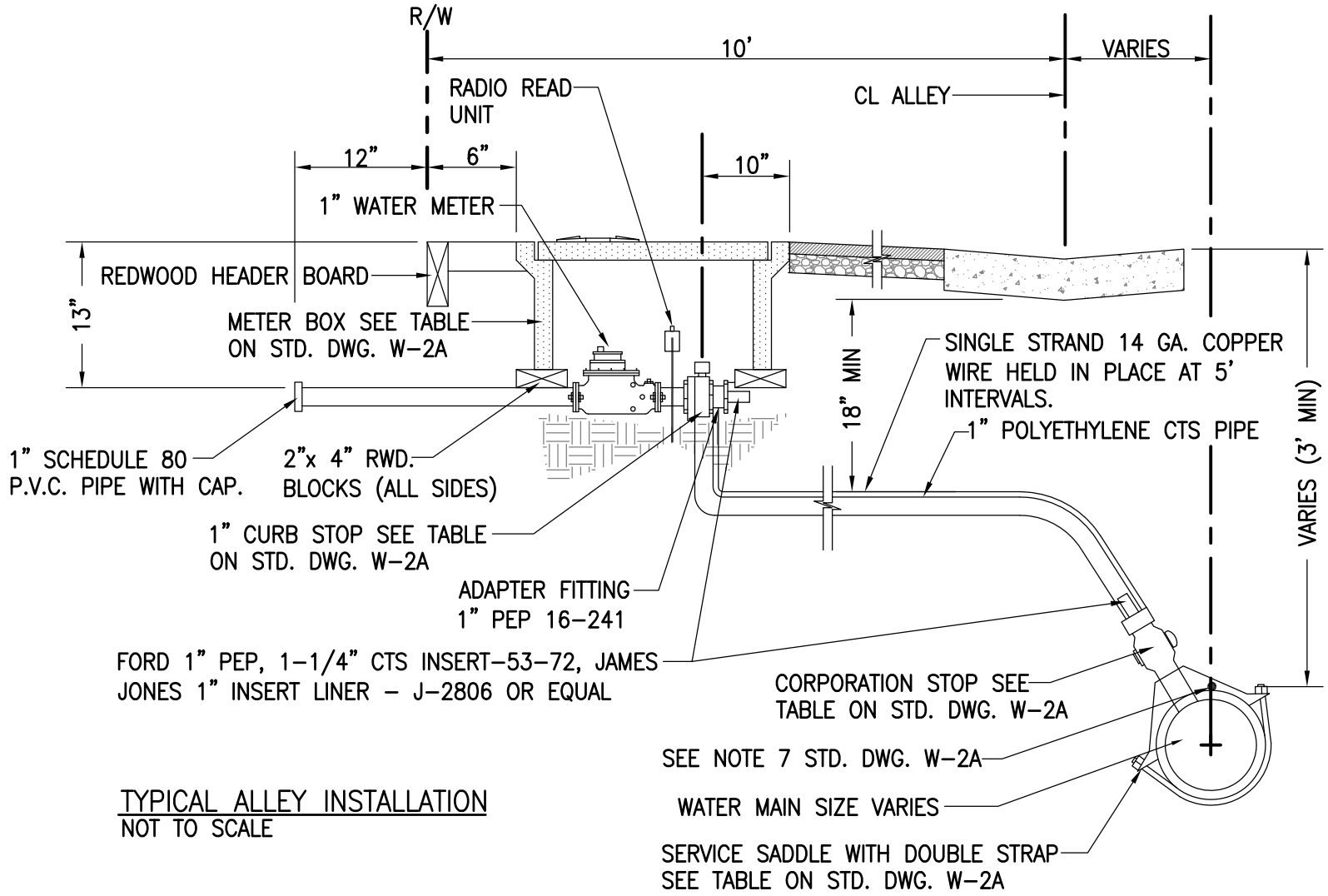

TYPICAL ALLEY INSTALLATION
NOT TO SCALE

NOTE

1. FOR ADDITIONAL INFORMATION AND SPECIFICATIONS SEE STANDARD DRAWING W-2A.

REVISIONS
FEB 09

CITY OF KINGSBURG

1-INCH WATER SERVICE ASSEMBLY - ALLEY

STD No. W-2

PIPE MATERIAL	MANUFACTURER	SERVICE SADDLE
ASBESTOS CEMENT PIPE (EXISTING),	SMITH–BLAIR	317
ASTM C900 PVC PIPE	ROMAC	202 NS

MANUFACTURER	CURB STOP	CORPORATION STOP	INLINE VALVE
JAMES JONES	J – 4201	J – 3403	J–1900W

METER BOX SCHEDULE					
METER	LOCATION	CHRISTY MODEL NO.	WIDTH	LENGTH	LID
		CONCRETE	CONCRETE	CONCRETE	CONCRETE
1"	SINGLE FAMILY RESIDENTIAL	N–36	17 1/8"	30 1/4"	B36E
		B–1730*	17 1/8"	30 1/4"	B–1730–51G*

*METER BOX AND LID MODEL FOR INSTALLATION IN TRAFFIC AREAS

NOTES:

1. IN FULL SIDEWALK AREAS CURB–STOP TO BE LOCATED AT POSITIONS INDICATED BY THE CITY ENGINEER.
2. IN SITUATIONS THAT A MONOLITHIC SIDEWALK DOES NOT EXIST, THE METER SHALL BE PLACED AT A MINIMUM OF 6 INCHES BEHIND THE BACK OF CURB.
3. METERS SHALL BE PER SPECIFICATIONAS.
4. VALVE BOXES SHALL BE BROUGHT TO PROPER GRADE PRIOR TO ACCEPTANCE OF WORK.
5. THE INSIDE OF THE VALVE BOXES SHALL BE CLEANED SUCH THAT THE METER, METER STOPS ARE ACCESSIBLE AND OPERATIONAL PRIOR TO THE ACCEPTANCE OF THE WORK.
6. TRADE NAMES ARE SPECIFIED HEREIN AS A STANDARD OF ACCEPTABILITY QUALITY. EQUIPMENT OF EQUAL QUALITY MAY BE USED AFTER APPROVAL BY THE CITY ENGINEER.
7. DIELECTRIC FITTING REQUIRED BETWEEN CURB STOP AND GALVANIZED STEEL PIPE HOUSE SERVICE.
8. SOLID 14 GAUGE COPPER WIRE TO BE LAID ALONG TOP OF NON–METALLIC PIPE AND HELD IN PLACE AT 5 FT. INTERVALS BY DUCT OR PLUMBERS TAPE AND CONNECTED TO ALL VALVES AND FITTINGS.
9. INSTALL METER WITH METER CONSTRUCTION ADAPTERS. JAMES JONES J–134, 2 REQUIRED.
10. NEW SERVICE ADDITIONS TO EXISTING MAINS SHALL BE HOT – TAPPED.
11. RADIO READ UNIT SHALL BE MOUNTED ON APPROVED MOUNTING STAKE WITHIN 2" OF THE LID OF THE METER BOX.
12. METERS TO BE ELSTER/OR NEPTUNE WITH NICOR CONNECTOR AND DATAMATIC FIREFLY(R) MODEL D4150. TURBINE OR COMPOUND AS DIRECTED.

REVISIONS

FEB 2012

CITY OF KINGSBURG

1–INCH WATER SERVICE ASSEMBLY
NOTES AND TABLES

STD No.
W–2A

SPECIAL CONSTRUCTION REQUIREMENTS

(TO BE USED ONLY WHERE REQUIRED SEPARATION CANNOT BE OBTAINED)

CASE 1 – NEW SEWER LINE BEING INSTALLED

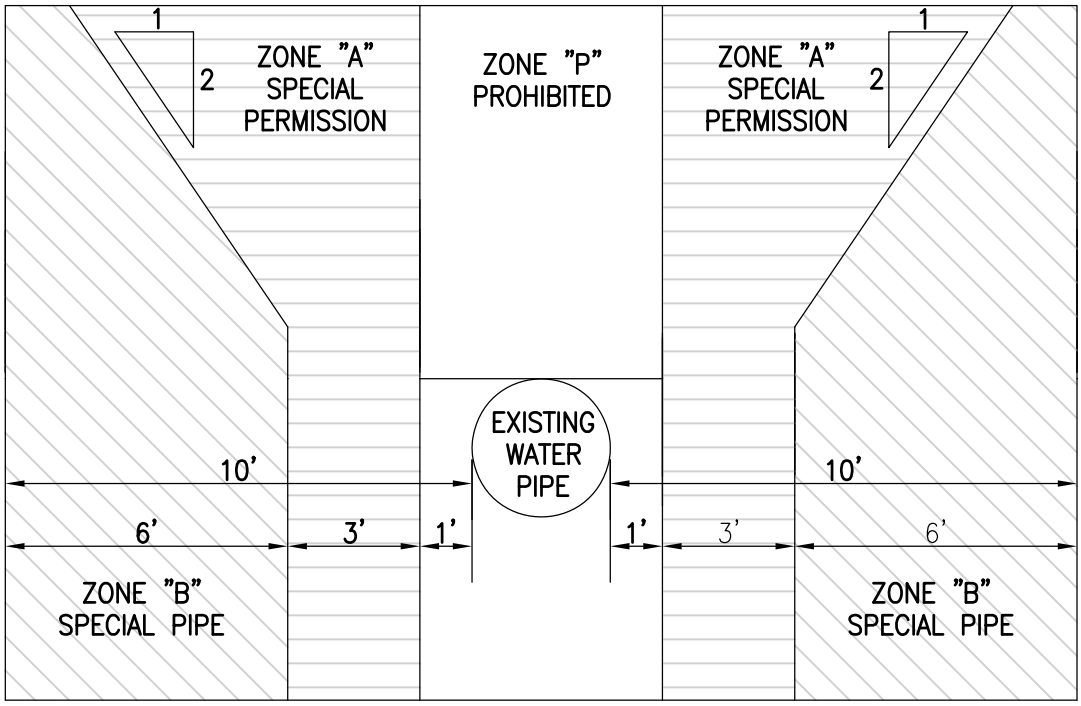

PARALLEL CONSTRUCTION

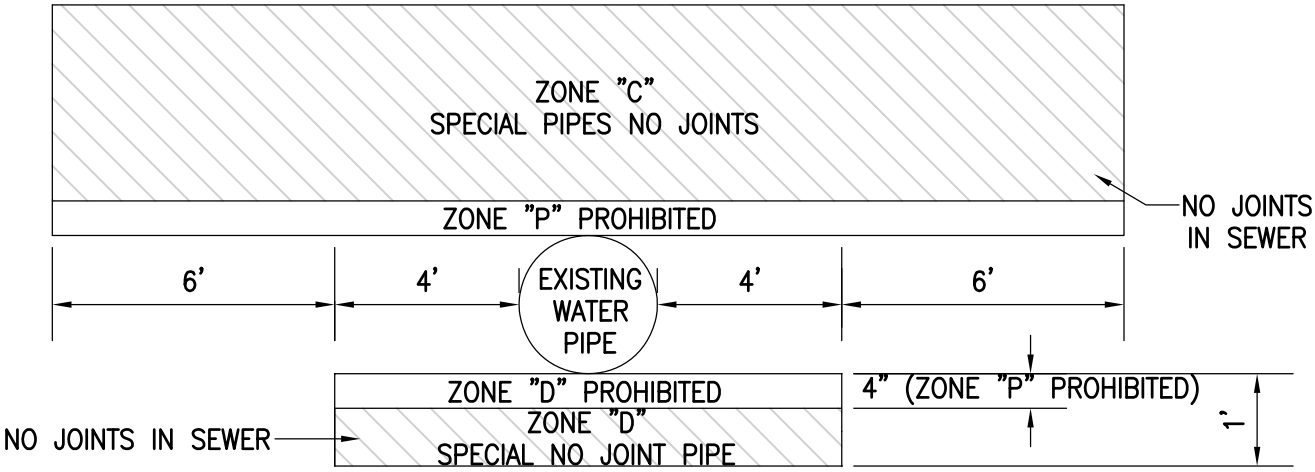

PERPENDICULAR CONSTRUCTION

NOTES:

1. ZONE "P" IS PROHIBITED CONSTRUCTION ZONE.
2. ZONE "C", SPECIAL PIPE, SHALL BE PVC CLASS 200 PER AWWA C900 OR APPROVED EQUAL.
3. SLURRY OR CONCRETE PIPE ENCASEMENT SHALL BE REQUIRED IN ALL DIRECTIONS IF PIPE CROSSING IS WITHIN ZONE "D" OR "C."

REVISIONS		CITY OF KINGSBURG	STD No.
FEB 09		CALIFORNIA HEALTH DEPARTMENT REQUIREMENTS	W–3

SPECIAL CONSTRUCTION REQUIREMENTS

(TO BE USED ONLY WHERE REQUIRED SEPARATION CANNOT BE OBTAINED)

CASE 2 – NEW WATER LINE BEING INSTALLED

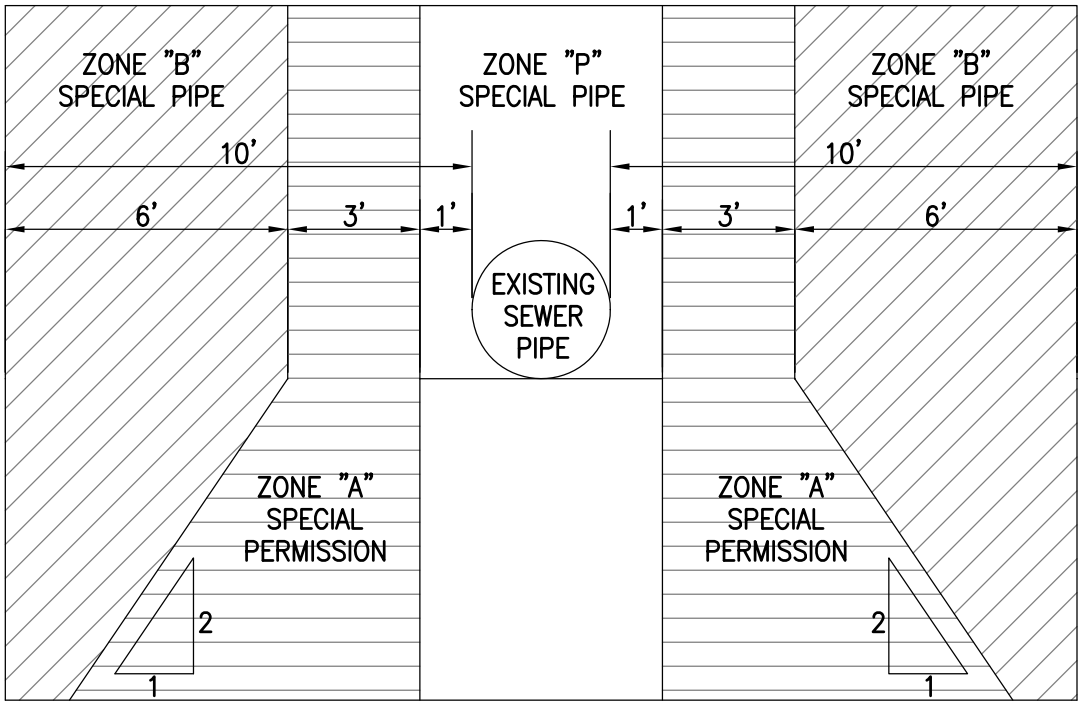

PARALLEL CONSTRUCTION

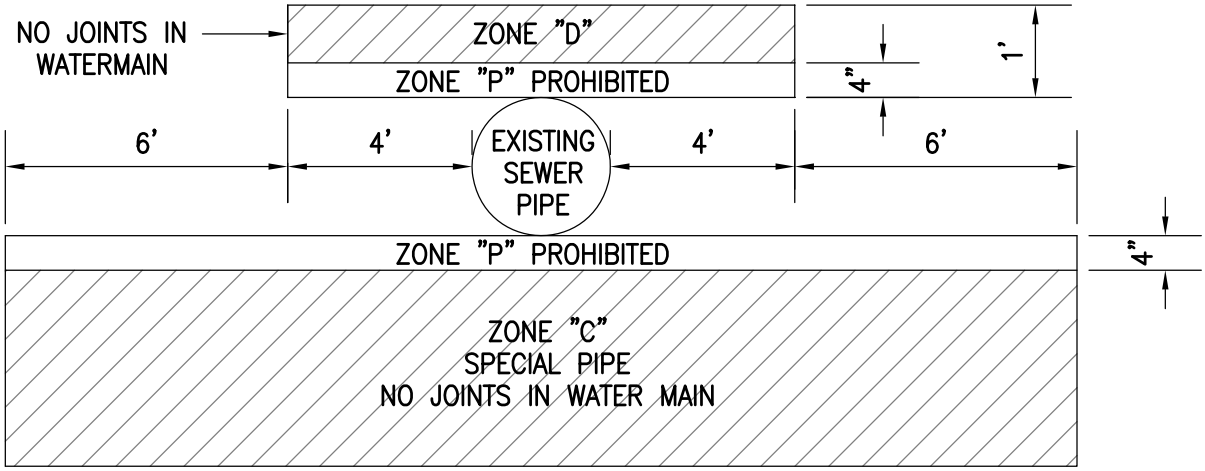

PERPENDICULAR CONSTRUCTION

NOTES:

1. ZONE "P" IS PROHIBITED CONSTRUCTION ZONE.
2. ZONE "C", SPECIAL PIPE, SHALL BE PVC CLASS 200 PER AWWA C900 OR APPROVED EQUAL.
3. SLURRY OR CONCRETE PIPE ENCASEMENT SHALL BE REQUIRED IN ALL DIRECTIONS IF PIPE CROSSING IS WITHIN ZONE "D" OR "C."

REVISIONS		CITY OF KINGSBURG	STD No.
FEB 09		CALIFORNIA HEALTH DEPARTMENT REQUIREMENTS	W–4

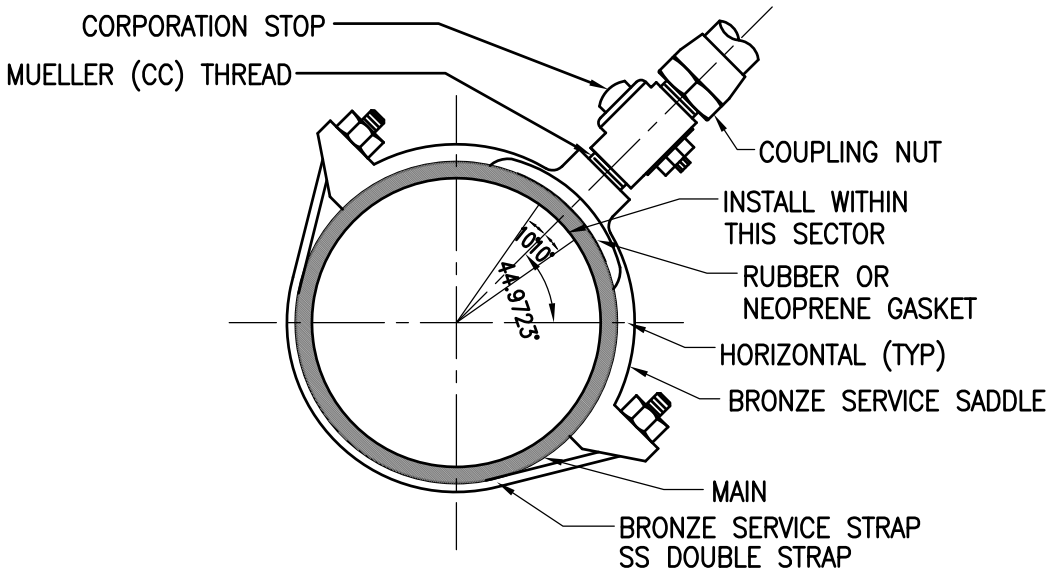

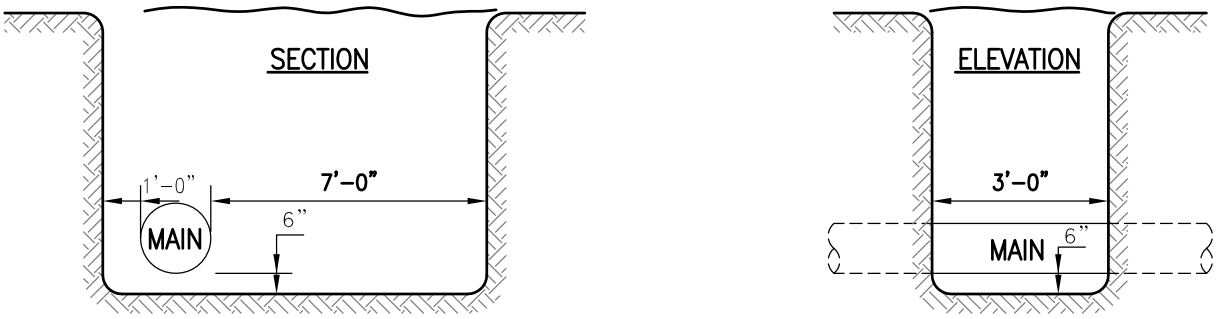

TAP EXCAVATION REQUIREMENTS FOR EXISTING MAINS 4" THRU 12"

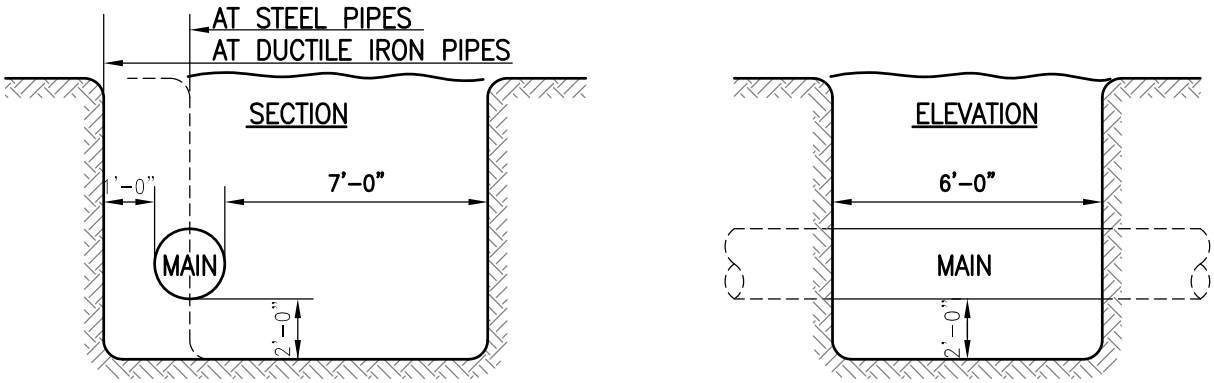

TAP EXCAVATION REQUIREMENTS FOR EXISTING MAINS OVER 12"

NOTES:

1. ALL CORPORATION STOPS TO HAVE A.W.W.A. STANDARD CORPORATION STOP THREAD (MUELLER CC) ON INLET END. OUTLET TO BE USED WITH FLARED OR COMPRESSION FITTING.

2. CONTACT ENGINEER FOR APPROVED LIST OF WATER SERVICE CONNECTION MATERIALS.

3. A BRONZE DOUBLE STRAP SERVICE SADDLE IS REQUIRED ON ALL WATER SERVICE TAPS 1" THRU 2" EXCEPT C-900.

REVISIONS		CITY OF KINGSBURG	STD No.
OCT 10		STANDARD WATER SERVICE TAPS 1" THRU 2" & TAP EXCAVATION REQUIREMENTS	W-5

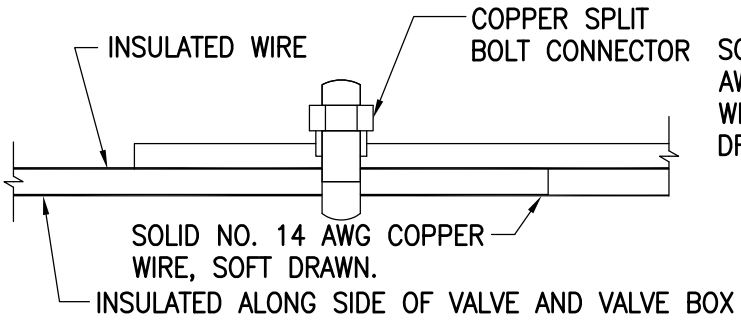

NOTE: IF WIRE ENDS AT VALVE BOX, RUN SINGLE INSULATED LEAD UP TO GROUND.

DETAIL OF CONNECTION

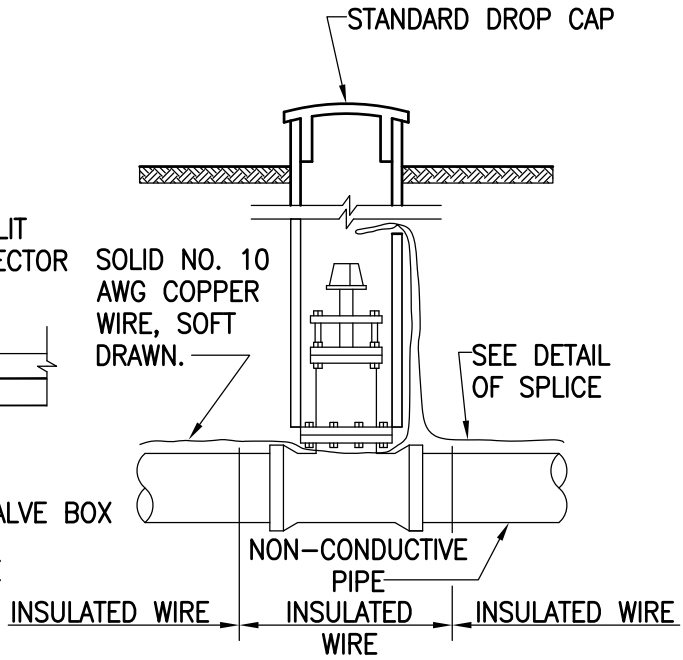

INSTALLATION AT VALVE BOX

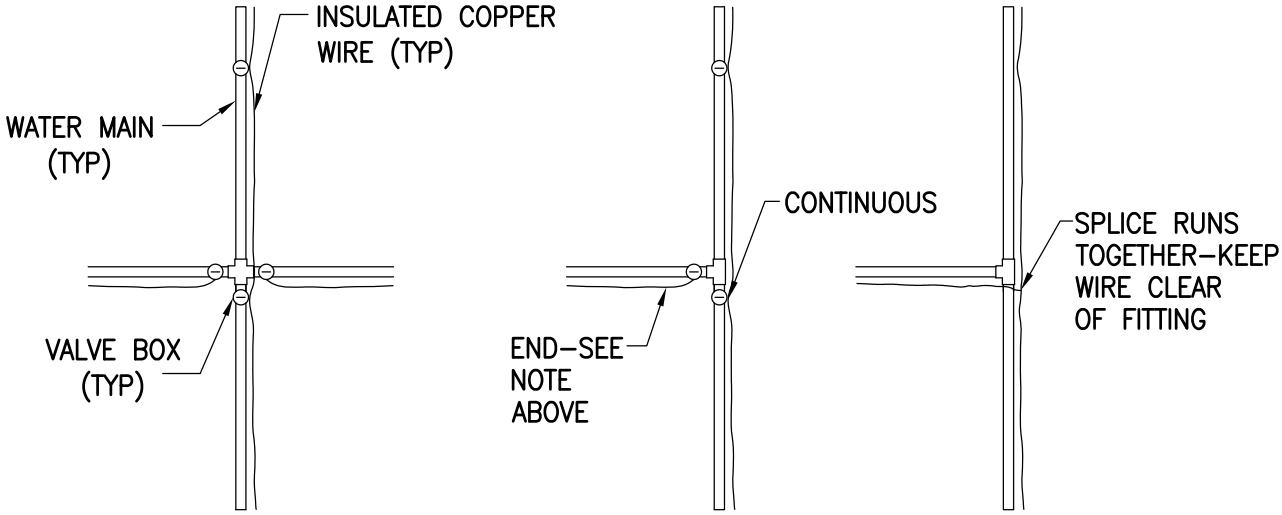

TYPICAL PLACING AT MAIN INTERSECTIONS

NOTE:

1. LOCATING WIRE TO BE LAID AT TOP OF PIPE.

REVISIONS		CITY OF KINGSBURG	STD No.
FEB 09		PIPE LOCATING WIRE FOR NON-CONDUCTIVE WATER MAINS	W-6

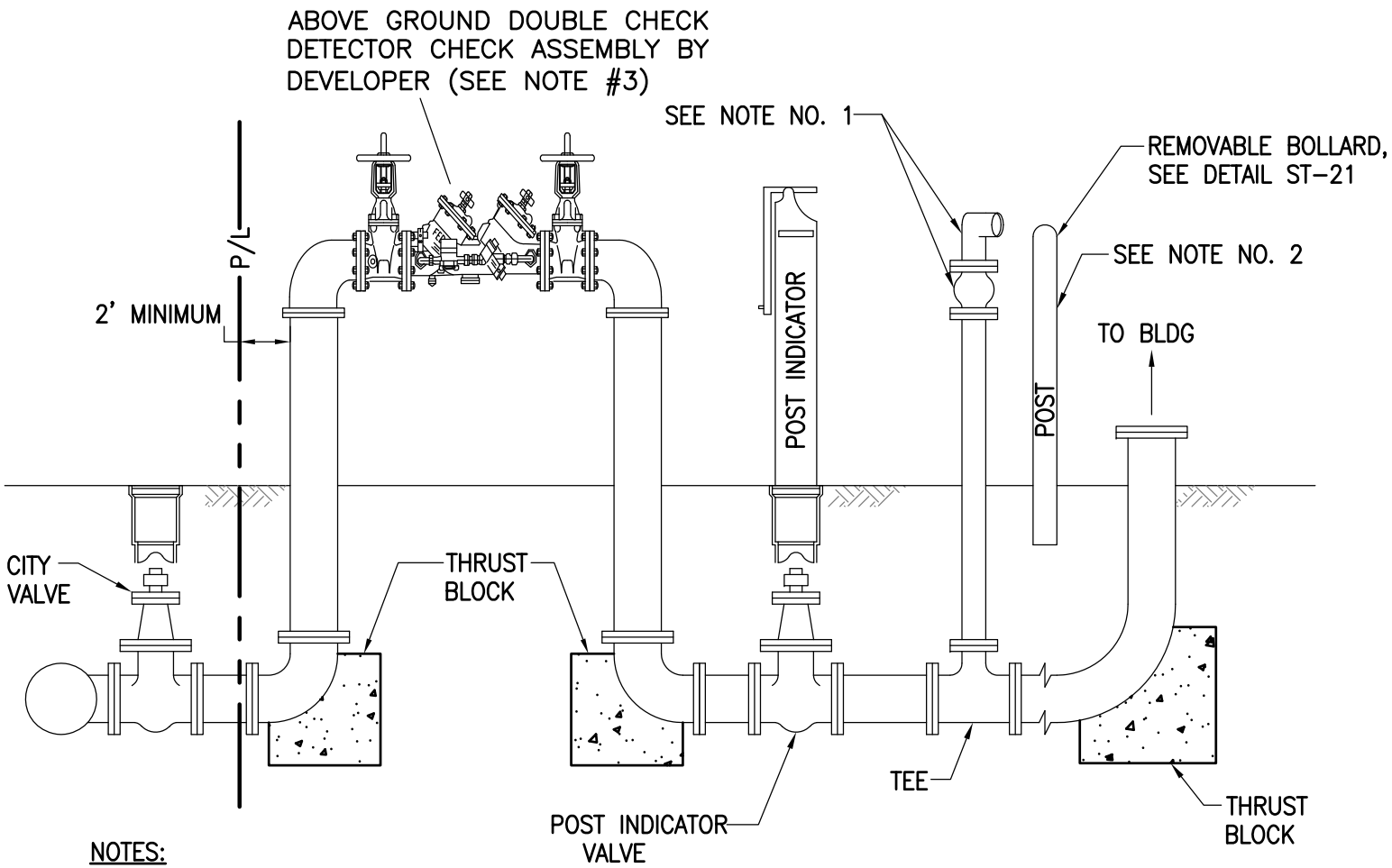

NOTES:

1. LISTED AND APPROVED FIRE DEPT. CONNECTION WITH CHECK VALVE PER CITY FIRE DEPT. REQUIREMENTS, SEE SECTION 12.03 OF THE CITY STANDARD SPECIFICATIONS FOR APPROVED FIRE DEPT. CONNECTION AND ADDITIONAL REQUIREMENTS.

2. GUARD POSTS AS REQUIRED, GUARD POST SHALL MAINTAIN A 3' CLEARANCE FROM FIRE DEPARTMENT CONNECTION.

3. SIZE AND MODEL OF DCDA DETERMINED BY SPRINKLER DESIGNER WITH APPROVAL BY CITY ENGINEER AND OR CITY PUBLIC WORKS DEPT.

4. CLASS 3-6 FIRE SPRINKLER SYSTEMS MAY REQUIRE DOUBLE CHECK VALVE ASSEMBLY OR REDUCED PRESSURE DEVICE. PLANS SHALL BE APPROVED BY THE CROSS CONNECTION SPECIALIST.

REVISIONS

OCT 10

CITY OF KINGSBURG

TYPICAL FIRE SPRINKLER WITH POST INDICATOR VALVE

STD No. W-7

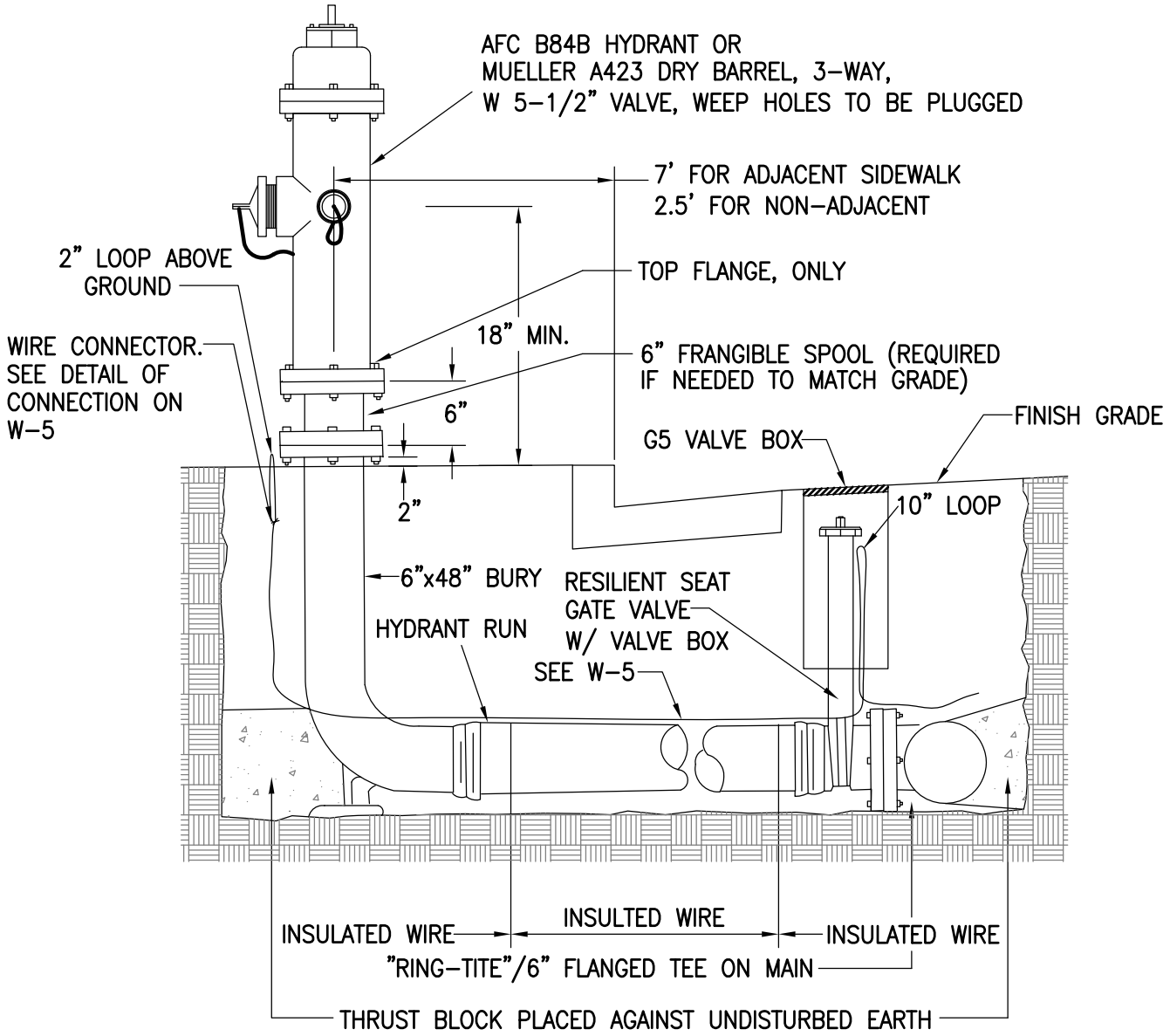

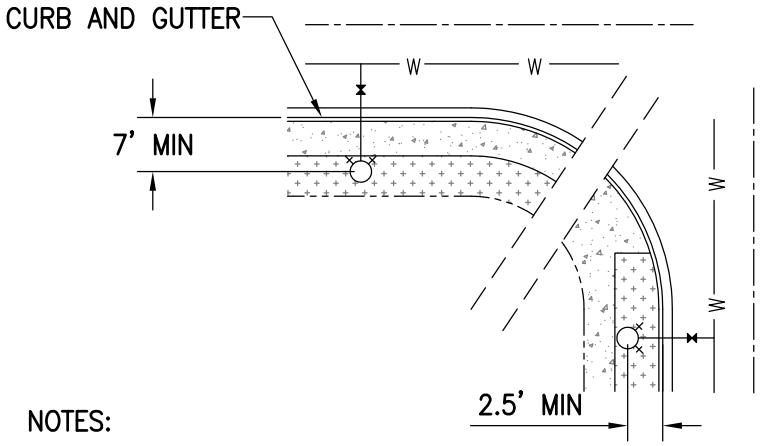

LEGEND

- FIRE HYDRANT
- CONCRETE SIDEWALK
- LANDSCAPE STRIP
- CENTERLINE
- PROPERTY LINE
- W — WATER MAIN
- 6" GATE VALVE

NOTES:

1. THERE SHALL BE NO LANDSCAPE OR OTHER OBSTRCUTIONS WITHIN 3-FEET OF THE FIRE HYDRANT.
2. BOLLARDS MAYBE REQUIRED IN THE ABSENCE OF CONCRETE CURB AND GUTTER PER CITY ENGINEER.

REVISIONS		CITY OF KINGSBURG	STD No.
OCT 10		FIRE HYDRANT INSTALLATION	W-8

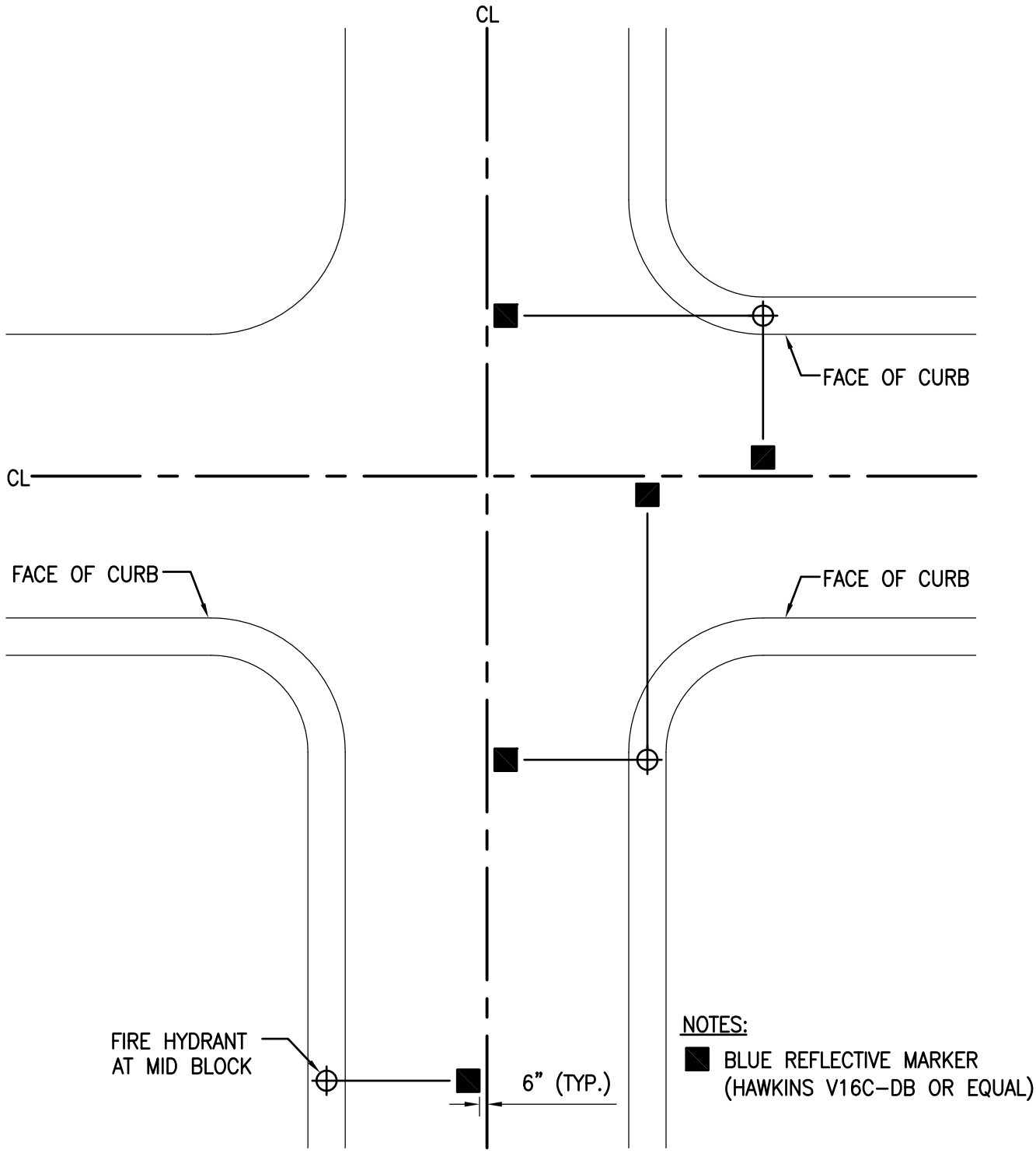

REVISIONS		CITY OF KINGSBURG	STD No.
FEB 09		BLUE REFLECTIVE MARKER PLACEMENT	W-9

VALVE BOX AND COVER

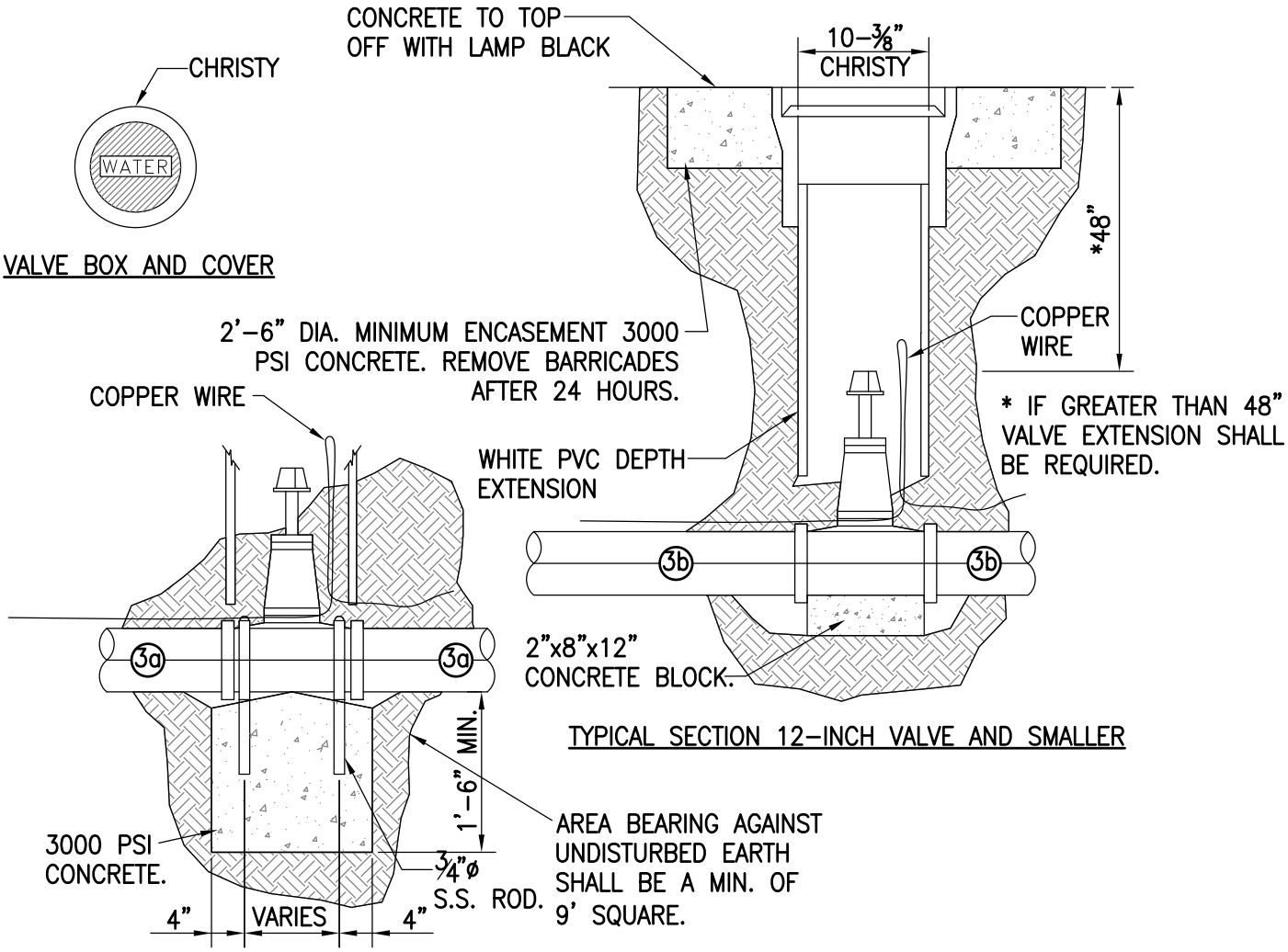

TYPICAL SECTION 12-INCH VALVE AND SMALLER

TYPICAL SECTION GREATER THAN 12-INCH VALVE

NOTES:

1. VALVE BOX AND COVER SHALL BE CHRISTY CONCRETE PRODUCTS NO. G-5.
2. ALL VALVES SHALL HAVE FLANGED CONNECTIONS AT ALL TEES AND CROSSES.
3. ALL VALVES SHALL BE SEPARATED FROM COLLARS AS NOTED:
   A. 6'6" (1/2 SECTION)
   B. 3'3" (1/4 SECTION)
4. VALVE SHALL BE RESILIENT SEAT GATE (12" OR LESS) OR BUTTERFLY (GREATER THAN 12") PER CITY SPECIFICATION.
5. CLEAN INSIDE OF EXTENSIONS SO STEM IS CLEAN OF DIRT.
6. SET VALVE BOX TO FINISH GRADE.
7. COMPACT EARTH AROUND BASE WITH MECHANICAL TAMPER TO 95% RELATIVE COMPACTION AND ENCASE IN OF CONCRETE TO MATCH EXIST GRADE, CONCRETE TO TOP OFF WITH LAMP BLACK.
8. VALVE BOXES IN DIRT OR UNDEVELOPED AREAS SHALL HAVE CONCRETE ENCASEMENT POURED TO GRADE (NO 2" AC).

REVISIONS		CITY OF KINGSBURG	STD No.
FEB 08		VALVE BOX INSTALLATION	W-10

MINIMUM THRUST BLOCK AREAS (IN SQUARE FEET)					
PIPE SIZE	TEE	90° BEND	45° BEND	22 ½° BEND	DEAD END
4"	1.5	2	1.5	1	1.5
6"	3	4.5	2.5	1.5	3
8"	5	7	4	2	5
10"	8.5	11.5	6.5	3.5	8.5
12"	11.5	16.5	9	4.5	11.5

NOTES:

1. AREAS ARE FOR 150 POUNDS PER SQUARE INCH WATER PRESSURE AND SANDY SOIL. AREAS SHALL BE DOUBLED FOR CLAYEY SOIL.

2. BLOCKING SHALL BE MADE OF CLASS B CONCRETE AND SHALL BE PLACED BETWEEN UNDISTURBED GROUND AND THE FITTING TO BE ANCHORED. THE BLOCKING SHALL BE PLACED SO THAT THE JOINTS OF THE PIPE AND FITTINGS WILL BE ACCESSIBLE FOR REPAIR.

3. THRUST BLOCKS SHALL BE CONSTRUCTED AT PIPE DIAMETER CHANGES AND AT OTHER FITTINGS NOT LISTED, AND SHALL BE PLACED AS DIRECTED BY THE ENGINEER.

REVISIONS	
FEB 09	

CITY OF KINGSBURG

THRUST BLOCKING

STD No.

W–11

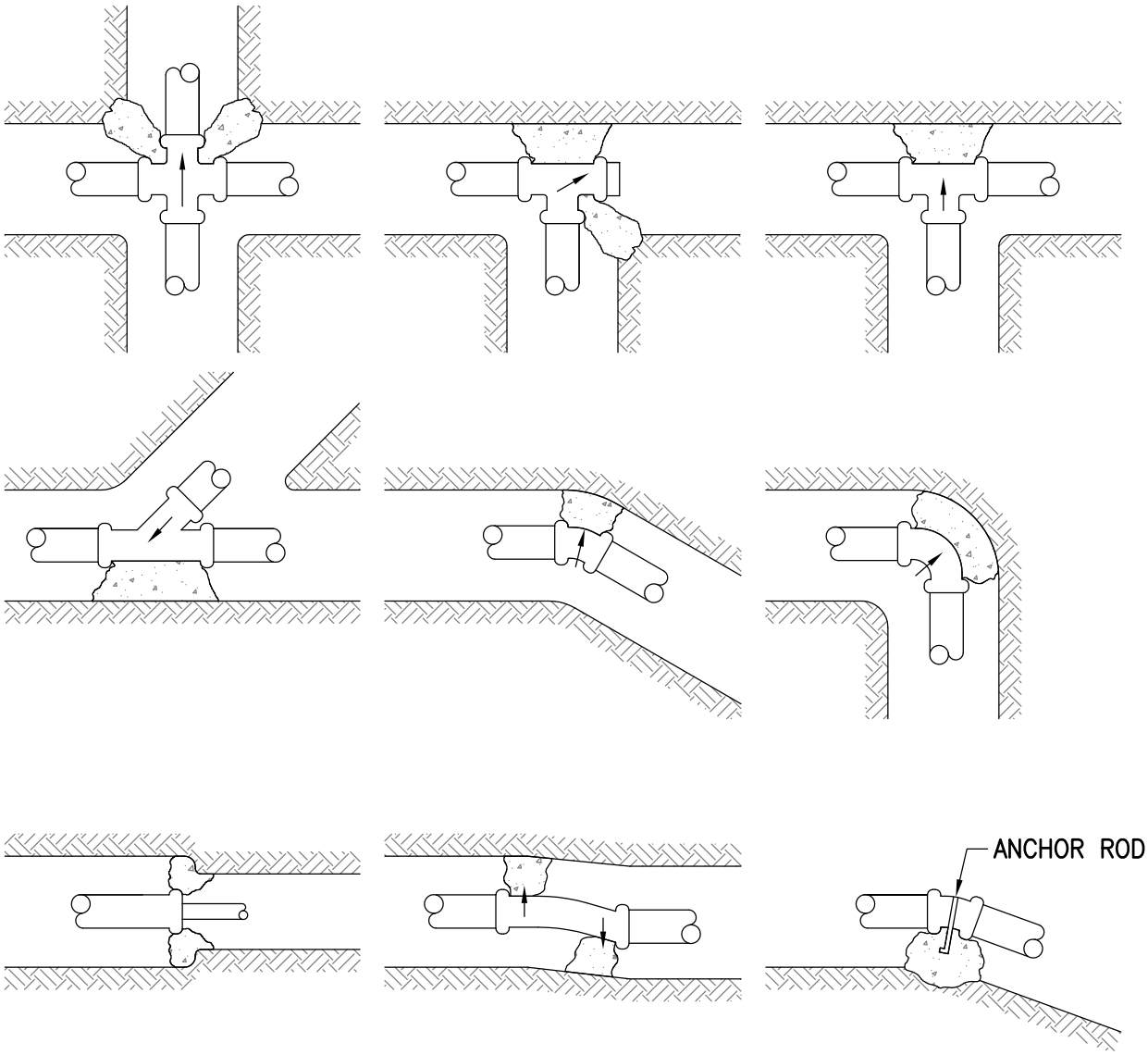

NOTES:

1. CONTRACTOR SHALL ARRANGE FOR SERVICES OF MANUFACTURER'S QUALIFIED INSTRUCTOR.
2. SIZES OF ANCHOR AND THRUST BLOCKS SHALL BE AS RECOMMENDED BY PIPE MANUFACTURER.
3. ANCHOR AND THRUST BLOCKS SHALL BEAR AGAINST UNDISTURBED SOIL.
4. CONCRETE SHALL ATTAIN 2000 PSI COMPRESSIVE STRENGTH.
5. ANCHOR RODS SHALL BE 1/2" DIA. REINFORCING STEEL, ENCASED IN CONCRETE.
6. KEEP CONCRETE CLEAR OF ALL PIPE OPENINGS.

REVISIONS		CITY OF KINGSBURG	STD No.
FEB 09		TYPICAL CONCRETE THRUST BLOCK	W–12

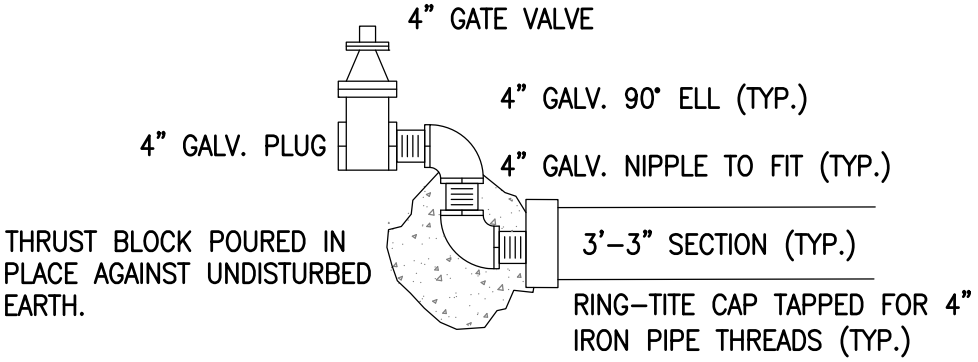

TEMPORARY BLOW-OFF

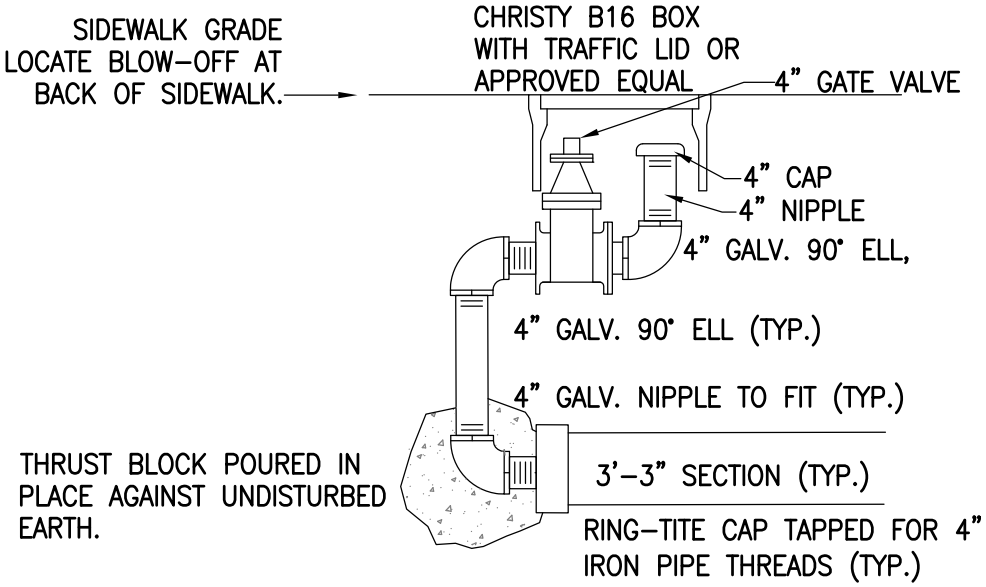

PERMANENT BLOW-OFF

REVISIONS		CITY OF KINGSBURG	STD No.
FEB 09			
		BLOW-OFF	W-13

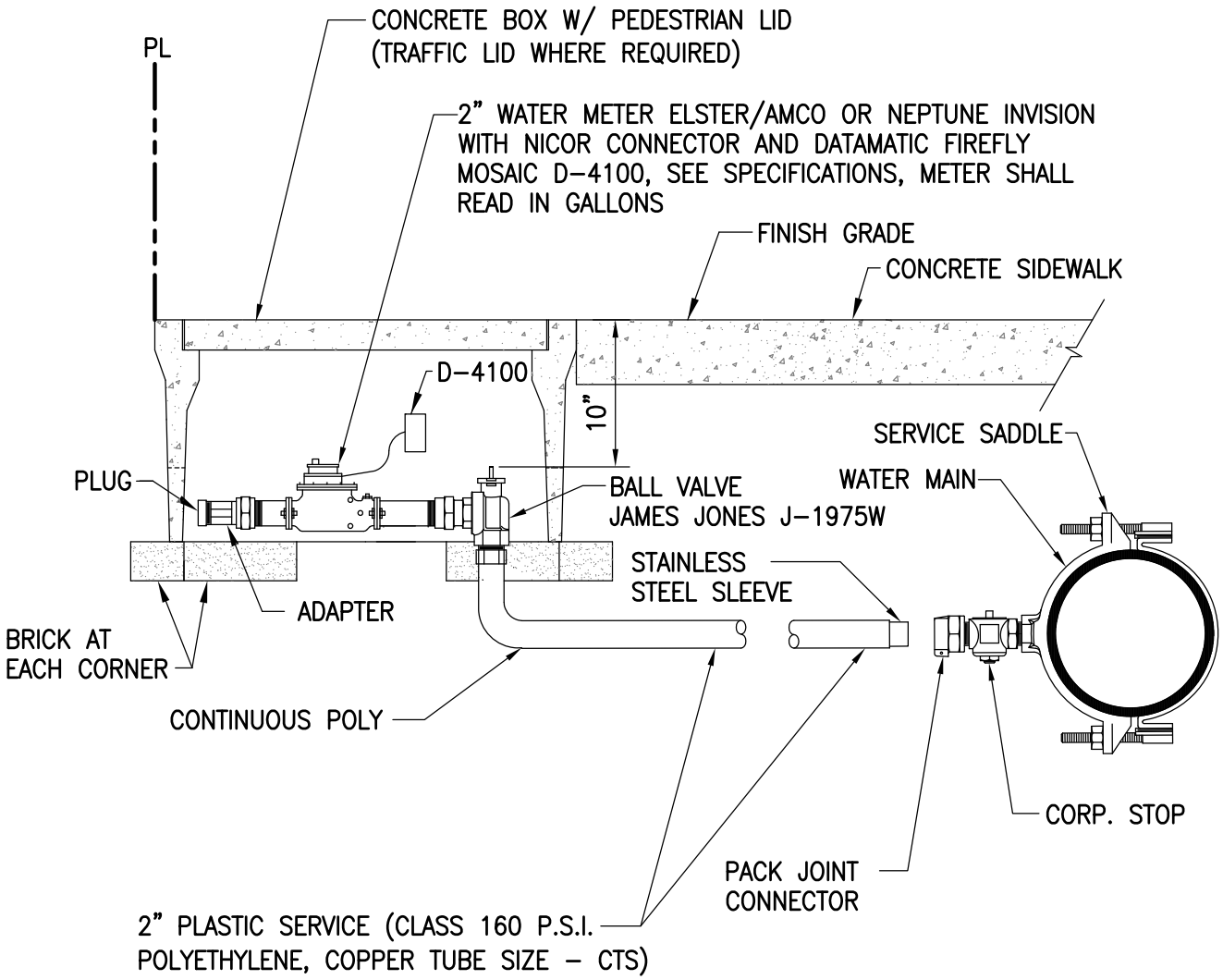

NOTES:

1. PLACEMENT OF METER AND BOX IN ALLEYS SHALL BE PER CITY ENGINEER.
2. IF THE SERVICE TRENCH IS IN EXISTING PAVING, THE PAVEMENT SHALL BE REPLACED AS PER MAIN LINE TRENCH.
3. SERVICE SHALL BE A MINIMUM OF 24" BELOW BOTTOM OF CURB.
4. CONTRACTOR SHALL BE RESPONSIBLE FOR DAMAGE TO CURB, GUTTER AND SIDEWALK INCLUDING DAMAGE FROM SETTLING OF THE TRENCH.

REVISIONS		CITY OF KINGSBURG	STD No.
OCT 10		2-INCH WATER SERVICE WITH METER BOX	W-14

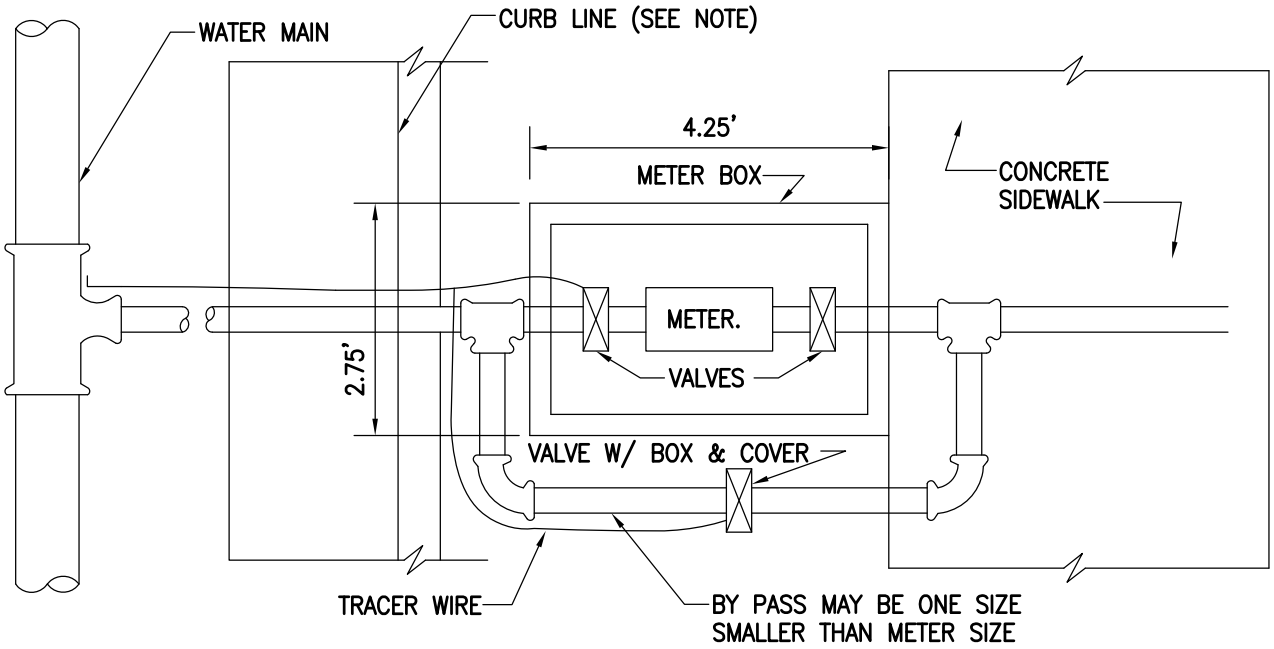

PLAN

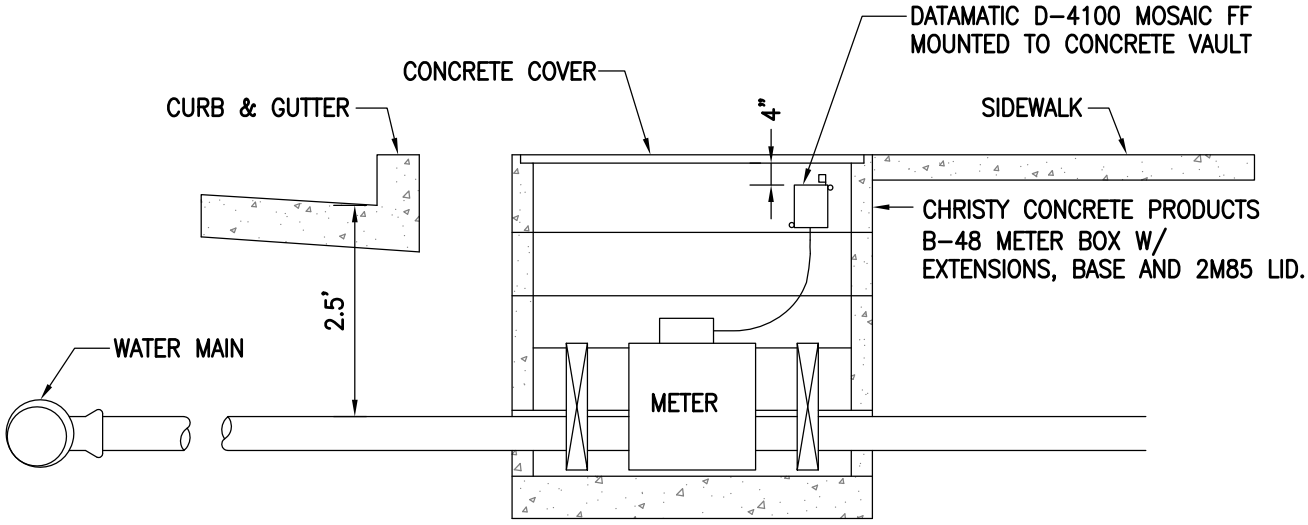

SECTION

NOTES:

1. IN CASES WHERE SIDEWALK AND CURB ARE ADJACENT, ASSUME THE BACK OF SIDEWALK TO BE BACK OF CURB AS SHOWN ON DRAWING.

2. METER TO BE ELSTER/AMCO INVISION OR NEPTUNE T-10 IN GALLONS WITH NICOR CONNECTOR FOR DATAMATIC FIREFLY D-4100.

REVISIONS		CITY OF KINGSBURG	STD No.
OCT 10		SERVICE CONNECTIONS OVER 2" AND METER BOX INSTALLATION	W-15

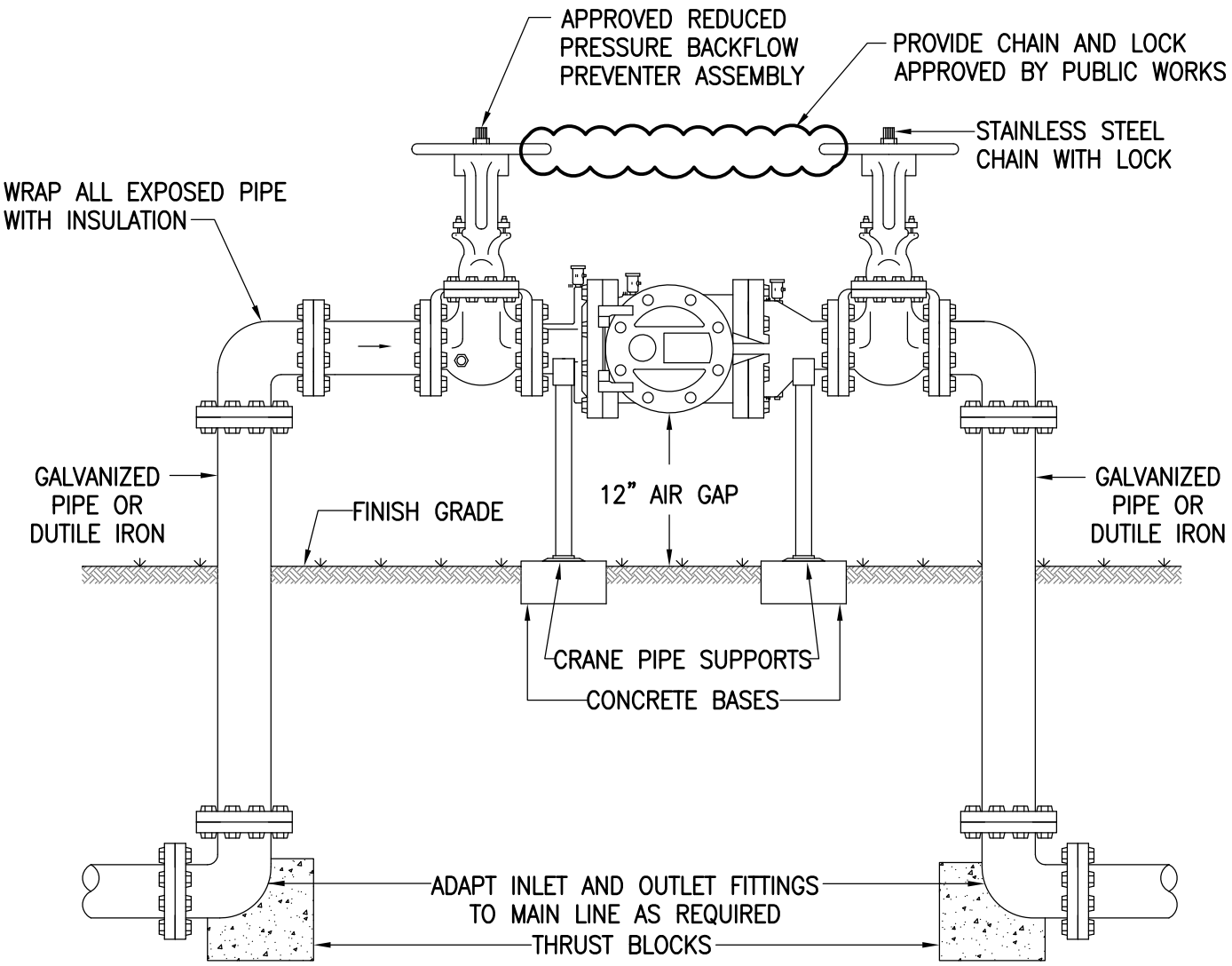

NOTES:

1. INSTALL 12" AIR GAP MINIMUM AND 30" MAXIMUM
2. ALL CONNECTIONS ON ASSEMBLY TO BE FLANGED, FLANGED JOINTS DO NOT APPLY TO 3" INSTALLATION.
3. BACKFLOW ASSEMBLY SHOULD BE PLACED IN A PLANTER SO THAT PLANT MATERIAL WILL SCREEN VIEW OF THE ASSEMBLY FROM THE STREET.
4. WATER SUPPLY – NO CONNECTIONS OR TEES WILL BE ALLOWED BETWEEN METER AND ASSEMBLY.
5. ASSEMBLY SHALL BE ACCESSIBLE FOR TESTING AND MAINTENANCE.
6. CERTIFICATION REQUIRED PRIOR TO ACCEPTANCE.

REVISIONS		CITY OF KINGSBURG	STD No.
OCT 10		REDUCED PRESSURE PRINCIPLE BACKFLOW PREVENTION ASSEMBLY FOR 3" & GREATER	W–16

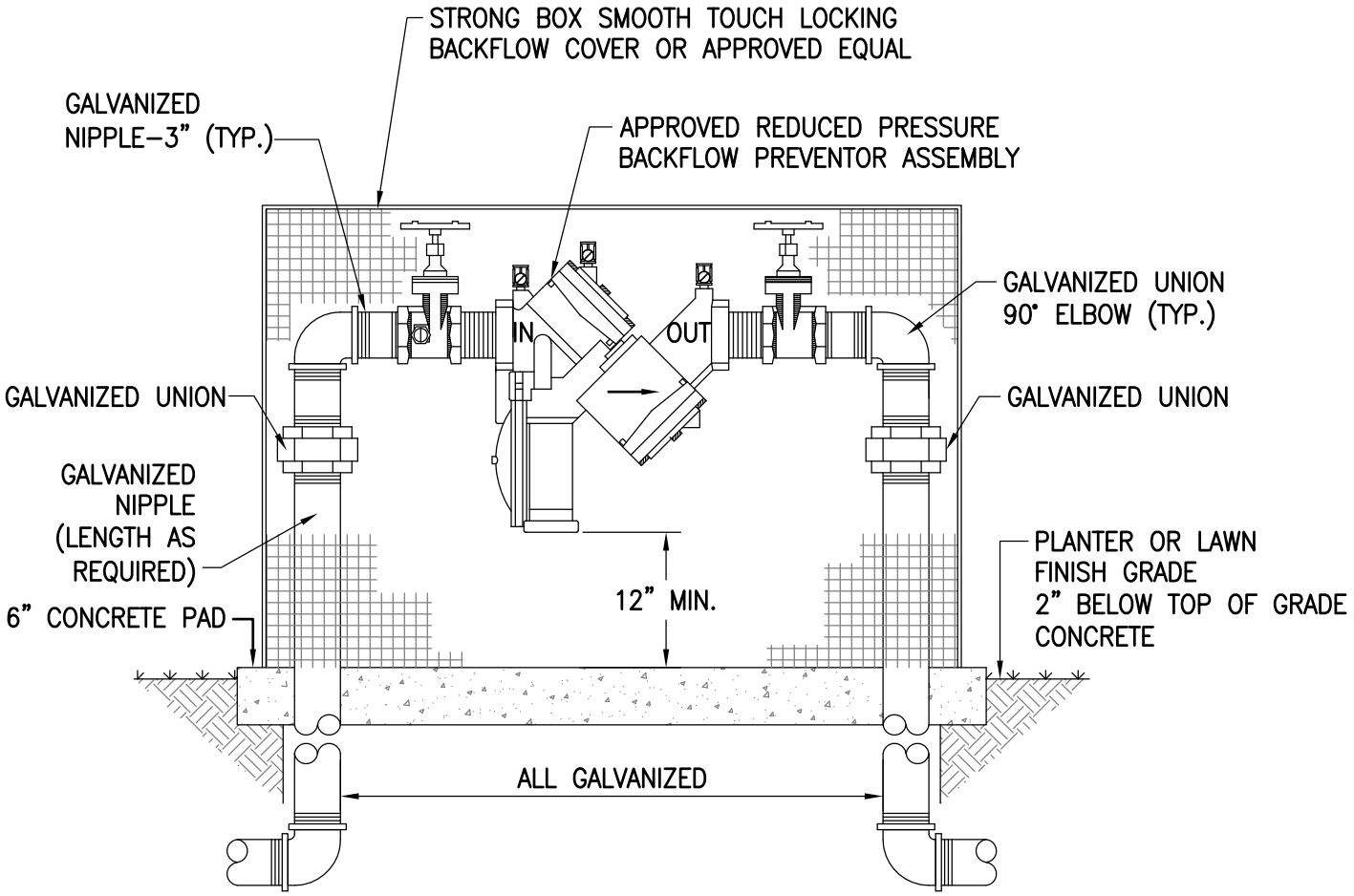

NOTES:

1. INSTALL APPROPRIATELY SIZE WEATHER BLANKET TO ALL BACKFLOW PREVENTION ASSEMBLIES.
2. BACKFLOW ASSEMBLY SHOULD BE PLACED IN A PLANTER SO THAT PLANT MATERIAL WILL SCREEN VIEW OF ASSEMBLY FROM THE STREET.
3. WATER SUPPLY – NO CONNECTIONS OR TEES WILL BE ALLOWED BETWEEN METER AND ASSEMBLY.
4. ASSEMBLY SHALL BE ACCESSIBLE FOR TESTING AND MAINTENANCE.
5. CERTIFICATION REQUIRED PRIOR TO ACCEPTANCE.

REVISIONS		CITY OF KINGSBURG	STD No.
OCT 10		REDUCED PRESSURE PRINCIPLE BACKFLOW PREVENTION ASSEMBLY FOR 1" TO 2-½" SIZE	W–17

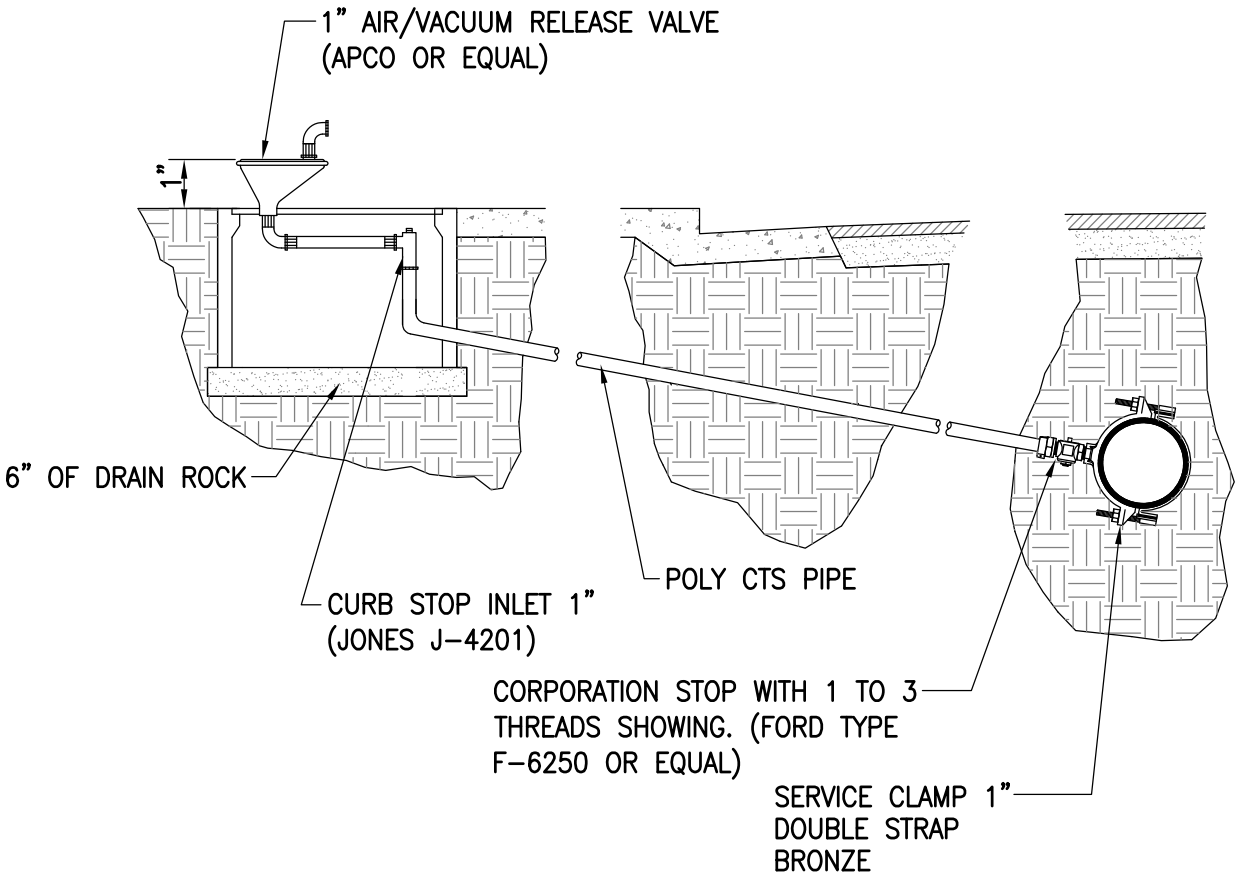

AIR & VACUUM RELEASE VALVE

NOTES:

1. AIR RELEASE VALVE SHALL HAVE CHRISTY B-36 METER BOX AND CHRISTY E-70 LID.
2. PLACE 6 INCHES OF DRAIN ROCK UNDER BOX.
3. ALL FITTINGS AND NIPPLES TO BE BRASS OR COPPER.
4. 1" ARV FOR 6" THROUGH 16" PIPE. 2" ARV FOR 18" AND GREATER.

REVISIONS		CITY OF KINGSBURG	STD No.
FEB 09		AIR & VACUUM RELEASE VALVE	W-18

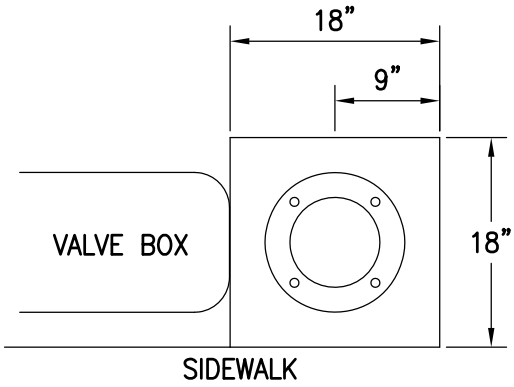

CONCRETE BASE DETAIL

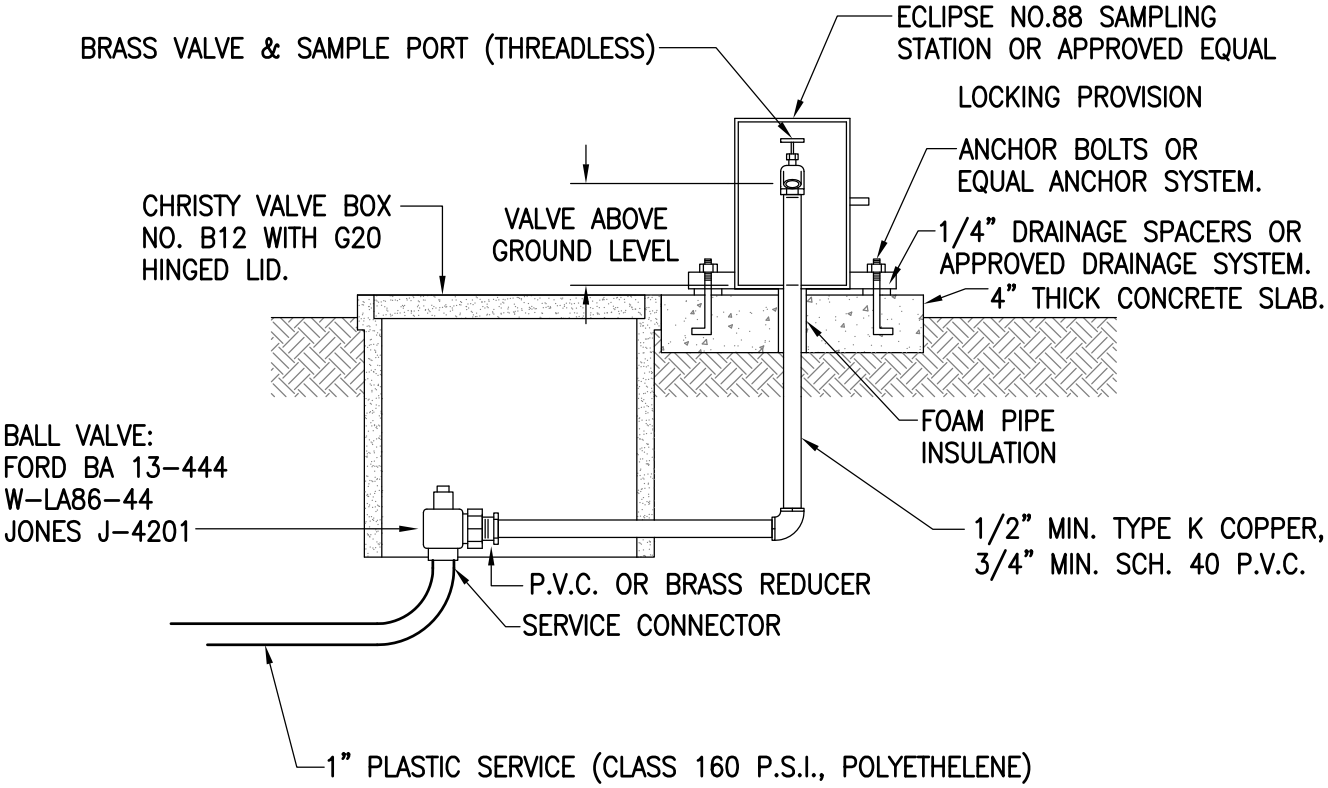

REVISIONS		CITY OF KINGSBURG	STD No.
OCT 10		SAMPLE STATION	W-19

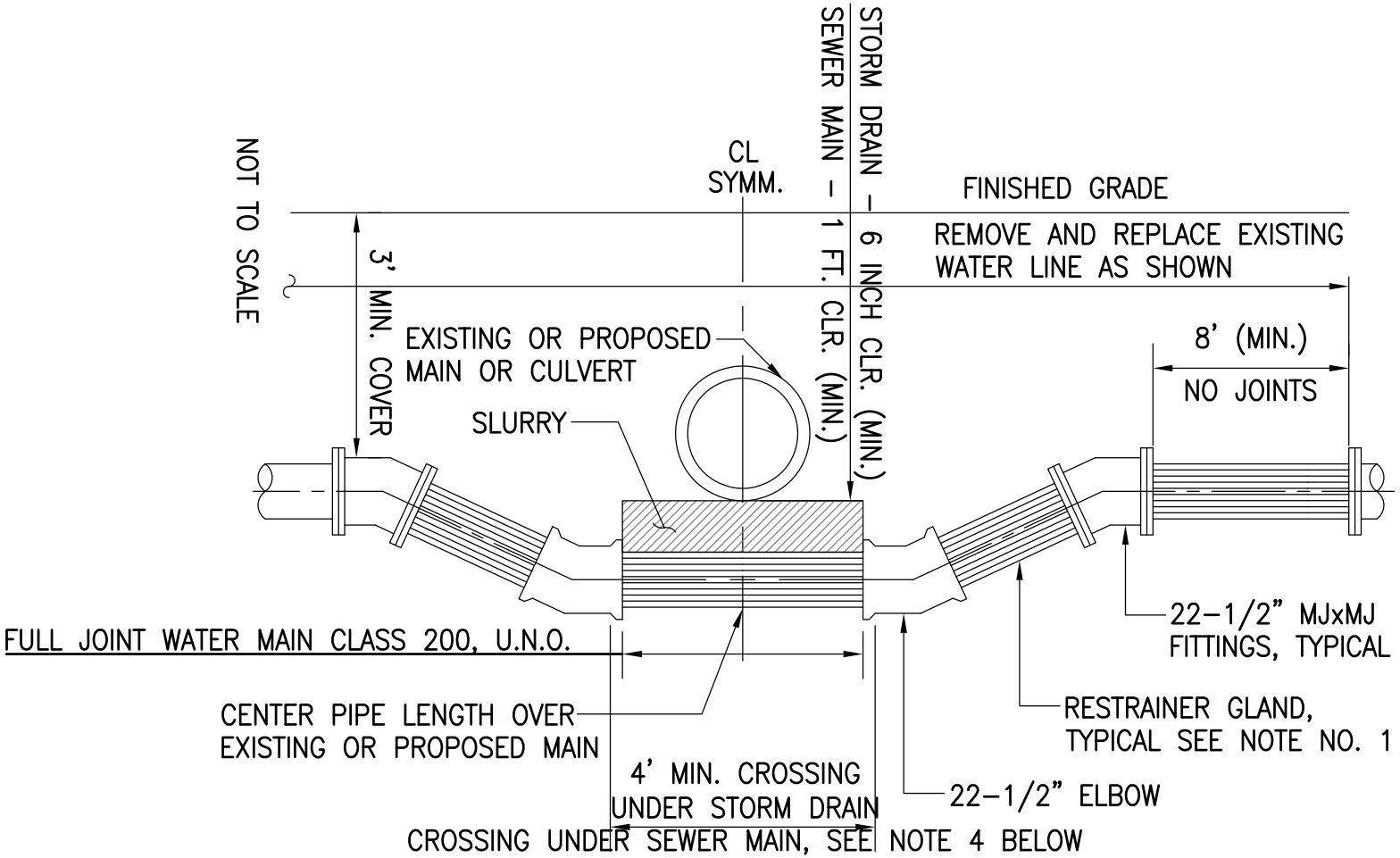

NOTE:

1. INSTALL RESTRAINER GLANDS AS SHOWN PER AWWA SPECIFICATION C600-87, MIN. 6-1/2" DIA. RESTRAINER. ENCASE IN 8 MIL. FILM.
2. SEE CITY WATER STANDARDS FOR DETAILS NOT SHOWN.
3. DISINFECT AND TEST ASSEMBLY PRIOR TO REPLACING TRENCH PAVING.
4. REFER TO W-6 & W-7 FOR SPECIAL CONSTRUCTION REQUIREMENTS FOR SEWER AND WATER SEPARATION.
5. SLURRY SHALL BE REQUIRED IF MINIMUM CLEARANCE IS NOT MET.

REVISIONS

FEB 09

CITY OF KINGSBURG

CONSTRUCTION REQUIREMENTS FOR
LOWERING WATER MAINS

STD
No.
W-20

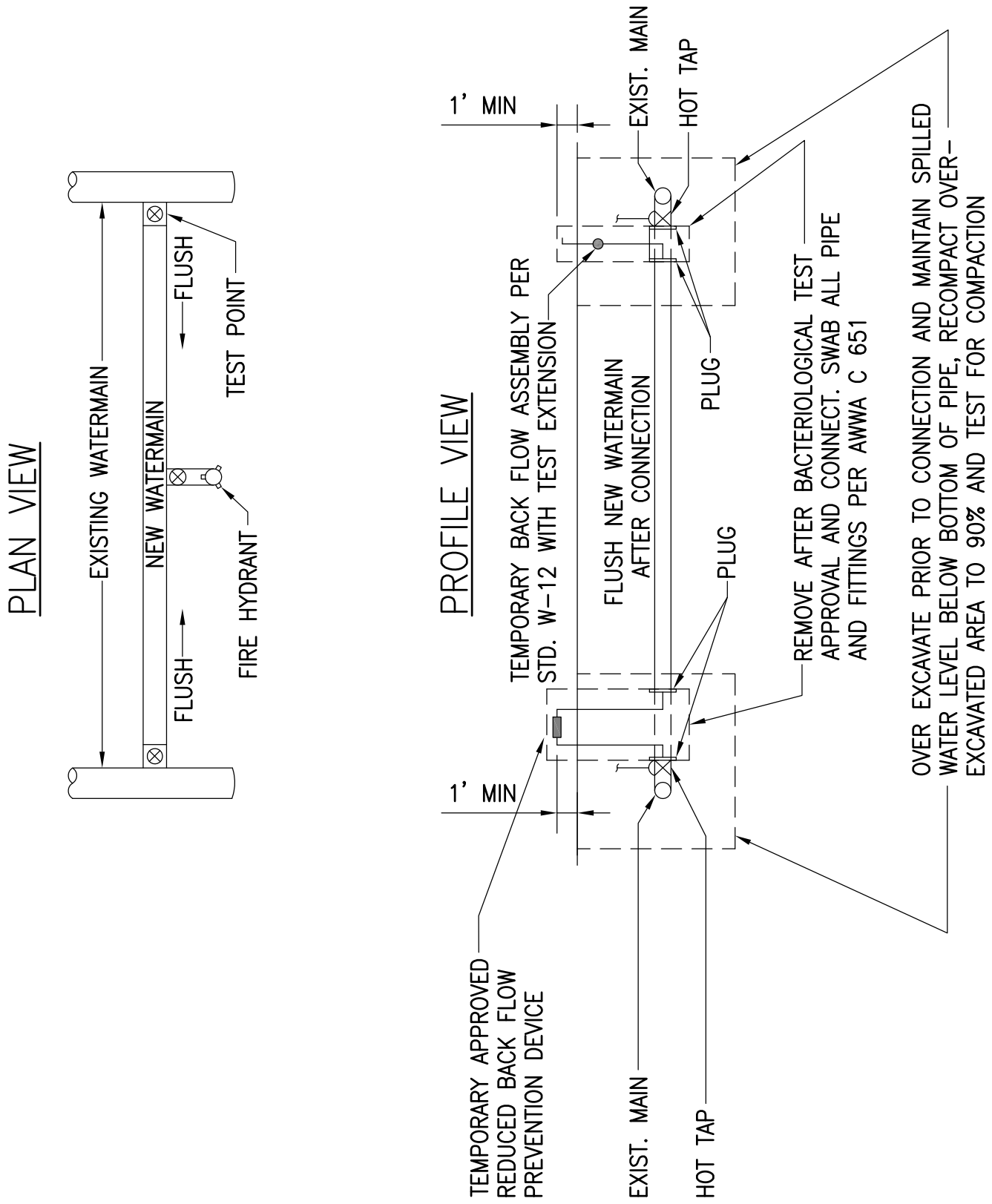

REVISIONS		CITY OF KINGSBURG	STD No.
FEB 09		WATERMAIN CONNECTION PROCEDURE – A	W–21

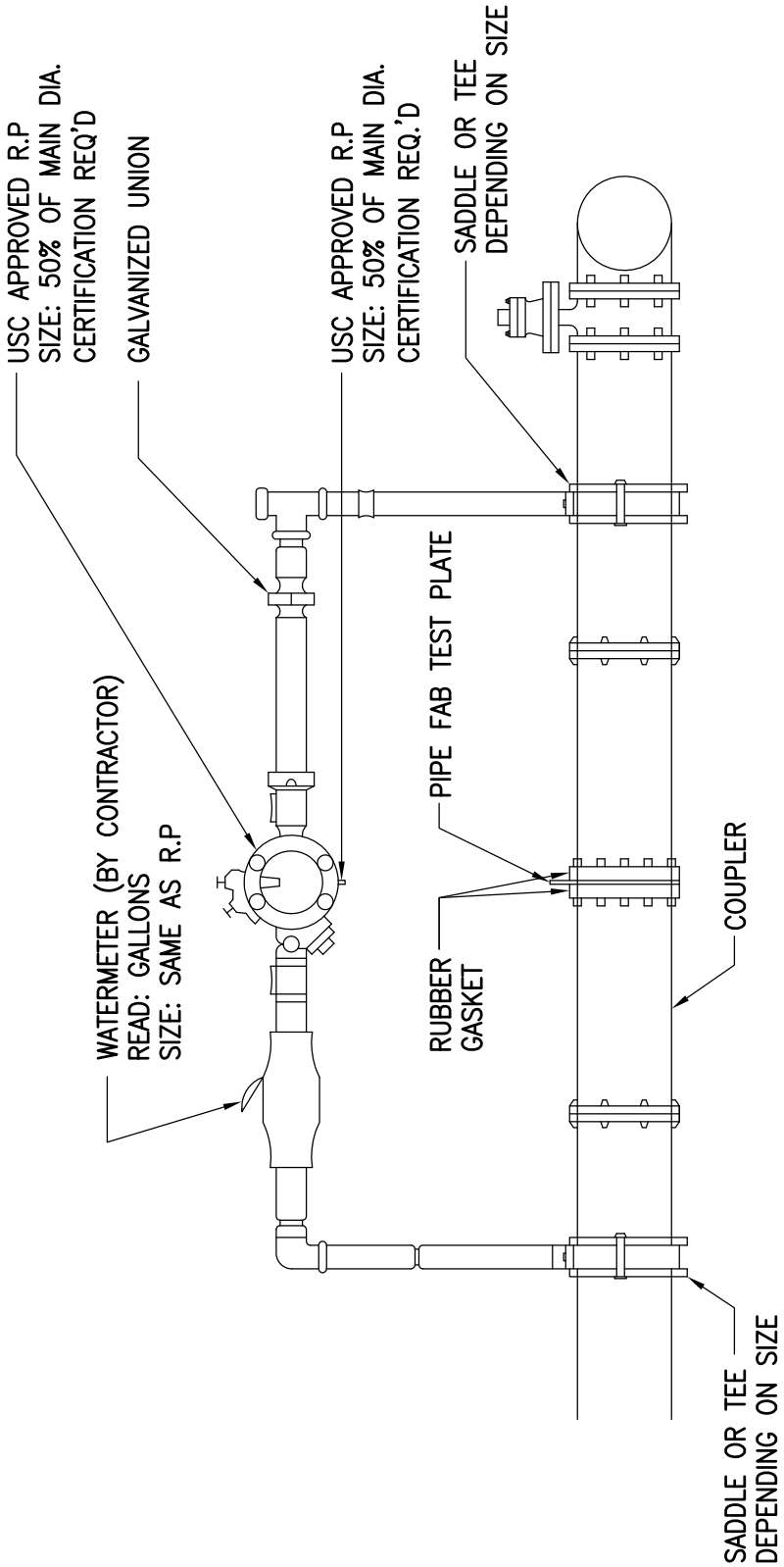

NOTE
INSTALL SADDLE CAP WHEN R.P IS REMOVED

REVISIONS		CITY OF KINGSBURG	STD No.
FEB 09		WATERMAIN CONNECTION PROCEDURE – B	W–22

LEGEND

1. REMOVE ALL PLUMBING EQUIPMENT AND DEBRIS FROM THE WELL PRIOR TO THE PLACEMENT OF ANY SEALING MATERIAL INTO THE WELL.
2. A VIDEO OF THE ENTIRE DEPTH OF THE WELL SHALL BE SUBMITTED TO THE WATER DIVISION FOR REVIEW.
3. A TREMIE PIPE SHALL BE USED FOR THE PLACEMENT OF SEALING IN WELLS, WHEN ONE OR MORE OF THE FOLLOWING CONDITIONS EXIST:
   - THE TOTAL WELL DEPTH IS GREATER THAN 30'
   - THE STATIC WATER LEVEL IS MORE THAN 5'
   - THE WELL'S DIAMETER IS 4' OR LESS
4. WHEN THE EXISTING WELL CASING IS FOUND TO BE PERFORATED, SLOTTED, CRACKED, SEPARATED, OR TO HAVE HOLES, THE WELL SHALL BE FILLED TO THE TOP WITH A SEALING MATERIAL APPROVED BY THE CITY OF KINGSBURG WATER DIVISION AND PRESSURIZED PER DWR BULLETIN XX-XX AND XX-XX.
5. THE TOTAL DEPTH OF THE WELL SHALL BE FILLED WITH AN IMPERVIOUS MATERIAL, CEMENT GROUT OR PER SECTION XX OF CITY OF KINGSBURG'S WELL DESTRUCTION STANDARDS.
6. EXCAVATE A HOLE AROUND THE WELL CASING TO A DEPTH OF NOT LESS THAN 6', OR SUBMIT FOR REVIEW AND APPROVAL METHODS TO PREP TO REMOVE 5' OF WELL CASING.
7. REMOVE A MINIMUM OF FIVE LINEAL FEET OF EXISTING WELL CASING.
8. REMAINING CASING TO EXTEND SIX INCHES ABOVE THE BOTTOM OF THE EXCAVATED HOLE.
9. ALLOW SPILL OVER TO FORM A ONE FOOT THICK CAP.
10. AFTER THE WELL HAS BEEN PROPERLY FILLED, AND THE SEALING MATERIAL HAS SET, BACKFILL AND COMPACT THE EXISTING NATIVE SOIL.

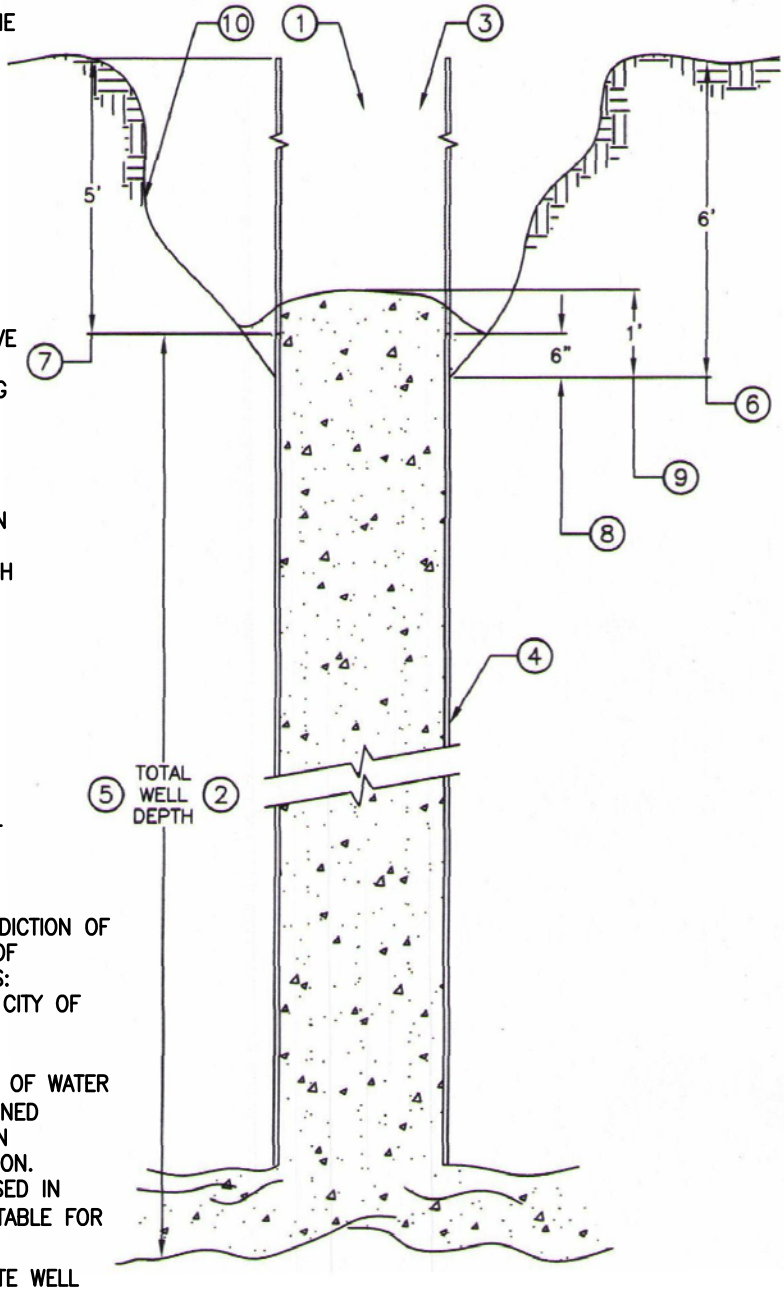

NOTES:

1. THE DESTRUCTION OF ALL WATER WELLS WITHIN THE JURISDICTION OF THE CITY OF KINGSBURG SHALL CONFORM TO THE STATE OF CALIFORNIA DEPARTMENT OF WATER RESOURCES STANDARDS: BULLETINS 74-81 AND 74-90, AND AS DIRECTED BY THE CITY OF KINGSBURG WATER DIVISION.
2. AUTHORIZATION FROM THE CAL EPA DEPARTMENT OF TOXIC SUBSTANCES CONTROL (DTSC) OR CALIFORNIA DEPARTMENT OF WATER RESOURCES (DWR) IS REQUIRED TO DESTROY DECOMMISSIONED MONITORING WELLS, SUBMIT A COPY OF THE AUTHORIZATION DOCUMENTATION WITH WELL DESTRUCTION PERMIT APPLICATION.
3. THERE ARE THREE TYPES OF SEALING GROUT MIXTURES USED IN DESTROYING WELLS WITHIN THE CITY OF KINGSBURG (SEE TABLE FOR BATCH SPECIFICATIONS)
4. BEFORE WELL DESTRUCTION OPERATIONS BEGIN, A COMPLETE WELL PERMIT APPLICATION PACKAGE FOR DESTRUCTION INCLUDING THE FOLLOWING CALCULATIONS ARE TO BE SUBMITTED FOR APPROVAL:
   - A MIX DESIGN OF THE SEALING MATERIAL PREPARED BY THE GROUT SUPPLIER.
   - A MIX DESIGN OF THE SEALING MATERIAL PREPARED BY THE PROJECT ENGINEER, OUTLINING FIELD MIXING PROCESS.
   - A VOLUME CALCULATION OF THE SEALING MATERIAL, PREPARED BY THE PROJECT ENGINEER.
   - A VOLUME CALCULATION FOR THE WELL PREPARED BY A PROJECT ENGINEER SHOWING THE FOLLOWING:
     a. VOLUME OF THE WELL CASING AND VOLUME OF THE FILTER PACK TO BE FILLED (FOR GRAVEL PACKED WELLS)
     b. VOLUME OF THE WELL (FOR OPEN BOTTOM WELLS)
5. ONLY COMPLETE PERMIT APPLICATION PACKAGES WILL BE PROCESSED.
6. ONLY CALIFORNIA C57 LICENSED CONTRACTORS ARE AUTHORIZED TO DESTROY ANY WELLS WITHIN THE CITY OF KINGSBURG.

BATCH TABLE

	WATER	CEMENT	SAND	BENTONITE
	gal	sack	lbs	lbs
CEMENT AND SAND GROUT=	6	1	85	n/a
NEAT CEMENT GROUT=	6	1	n/a	n/a
BENTONITE CEMENT GROUT=	8	1	n/a	1.88

REVISIONS	
OCT 10	

CITY OF KINGSBURG

WELL DESTRUCTION REQUIREMENTS

STD No. W-23

SPECIFICATIONS

1. THIS STANDARD IS NOT ALLOWED WITHIN THE TRAVELED WAY AND ANY PAVED AREAS OF A PUBLIC STREET.
2. NO LESS THAN 12 FEET OF HORIZONTAL SEPARATION SHALL BE MAINTAINED BETWEEN THE MONITORING WELL AND ANY EXISTING UNDERGROUND UTILITY.
3. THE WELL BOX SHALL BE STRUCTURALLY SOUND AND STRONG ENOUGH TO SUPPORT VEHICULAR TRAFFIC. IT SHALL BE TRAFFIC-RATED AS TESTED BY AN OFFICIAL TESTING LABORATORY TO MEET AASHTO STANDARD FOR "H-20" TRUCK LOADINGS.
4. THE TOP OF THE WELL SHALL BE PERMANENTLY MARKED WITH LARGE LETTERS "MONITORING WELL."
5. THE WELL COVER SHALL BE BOLT DOWN OR EQUIVALENT TO PROVIDE PROTECTION AGAINST UNAUTHORIZED ACCESS.
6. THE WELL COVER SHALL BE WATERTIGHT TO PROTECT AGAINST ENTRY OF SURFACE WATER.
7. THE TOP OF THE WELL SHALL BE SET 1.0 TO 1.5 INCHES ABOVE SURROUNDING GRADE TO PROVIDE FOR DRAINAGE AWAY FROM THE COVER, EXCEPT FOR WELLS INSTALLED IN SIDEWALK OR PAVED AREAS WHERE TOP OF THE CONCRETE PAD SHALL BE INSTALLED FLUSH AND MATCH EXISTING CONDITIONS.
8. A CONCRETE PAD WITH A MINIMUM THICKNESS OF 6 INCHES SHALL BE CONSTRUCTED AROUND THE WELL BOX. THE PAD SHALL EXTEND LATERALLY A MINIMUM OF 12 INCHES FROM OUTSIDE OF THE WELL BOX. THE PAD SHALL BE CONSTRUCTED TO BE FREE OF CRACKS OR OTHER DEFECTS LIKELY TO AFFECT WATER TIGHTNESS.
9. A LOCKING WATERTIGHT WELL CAP SHALL BE INSTALLED AT THE TOP OF THE WELL CASING SO THAT SURFACE WATER THAT MAY ENTER THE VAULT WILL NOT ENTER THE WELL.
10. MONITORING WELLS SHALL BE CONSTRUCTED IN ACCORDANCE WITH THE CALIFORNIA WELL STANDARDS.

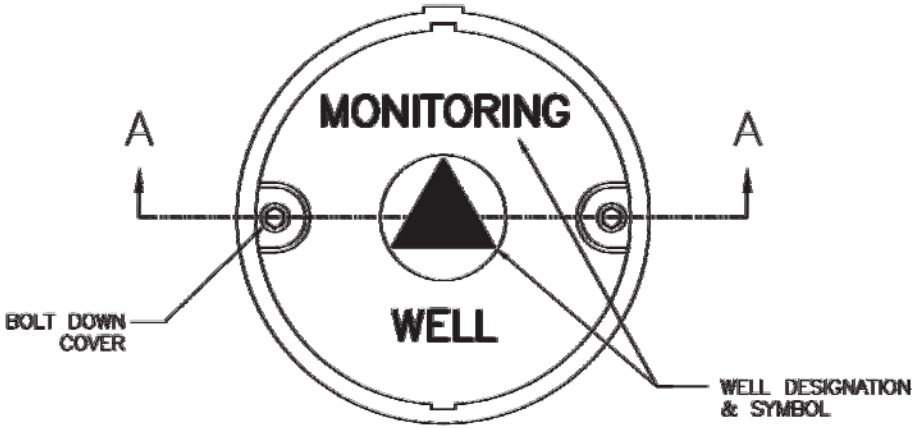

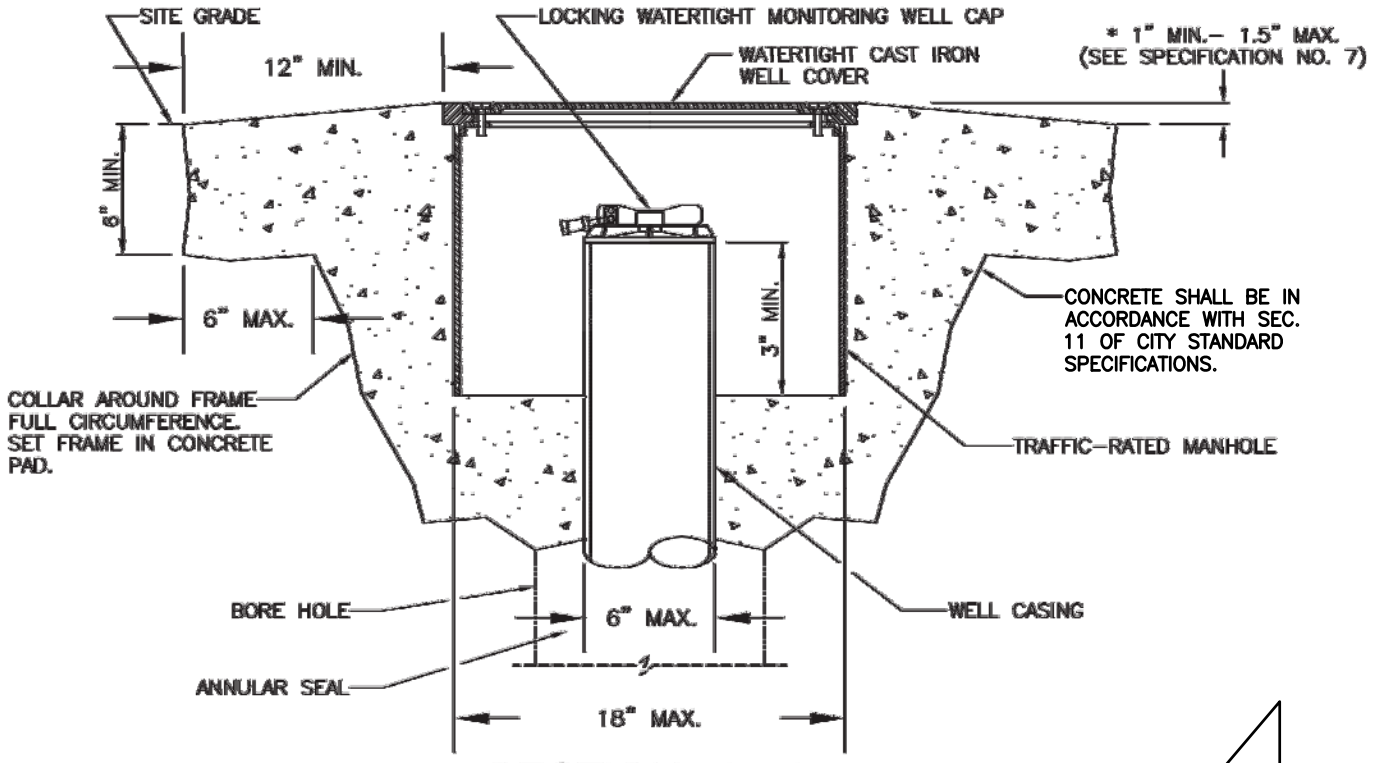

SECTION A–A

REVISIONS		CITY OF KINGSBURG	STD No.
OCT 10		MONITORING WELL MANHOLE CONSTRUCTION DETAIL	W–24